ASSA ABLOY

ASSA ABLOY PRODUCT CATALOGUE

Experience a safer
and more open world

ASSA ABLOY Specification Service

ASSA ABLOY

Specification Service

For all architectural hardware specification assistance refer to your local ASSA ABLOY sales office.
A fully comprehensive, obligation free architectural door hardware specification can be prepared by a qualified architectural hardware consultant.

Disclaimer:

Whilst every effort has been made to ensure that the information contained in this catalogue is accurate a the time of publication. ASSA ABLOY or its agents prior to placing an order to ascertain current information on specifice products, as ASSA ABLOY reserves the right to make changes without notice. ASSA ABLOY will not be liable for any injury, loss or damage whatsover, arising from any errors or omissions in the information contained in the catalogue or arising from the use of application of the information contained herein. This catalogue does not constitute an offer for the sale of any particular product.

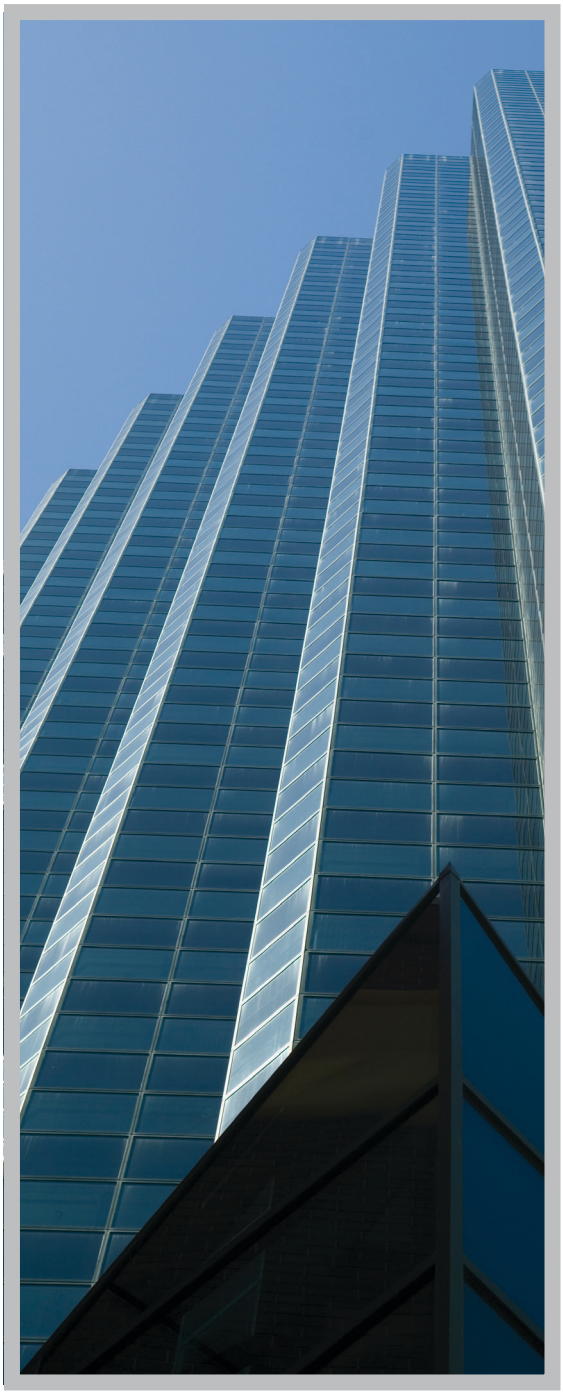

Why are we the global leader in door access solutions?

The ASSA ABLOY Group is the global leader in access solutions. Every day, we help billions of people experience a more open world.

ASSA ABLOY Opening Solutions leads the development within door openings and products for access solutions in homes, businesses and institutions. Our offering includes doors, door and window hardware, mechanical and smart locks, access control and service.

1

Delivering tomorrow's security

2

Experience and expertise

3
A rich heritage

4
Testing and accreditation

ASSA ABLOY

Table of Contents

AAOS System	5
Hinges	7
Lever Handlesets	25
Mortise Locksets	37
Euro Profile Cylinders	61
Cylindrical Locksets	73
Panic Exit Devices	81
Door Closers	95
Floor Springs	125
Patch Fitting	159
Pull Handle	167
Shower Hardware	171
General Hardware	189
Electric Strike	205
Integral Wireless Access Control	217
Sliding Door Fitting	223

Experience a safer
and more open world

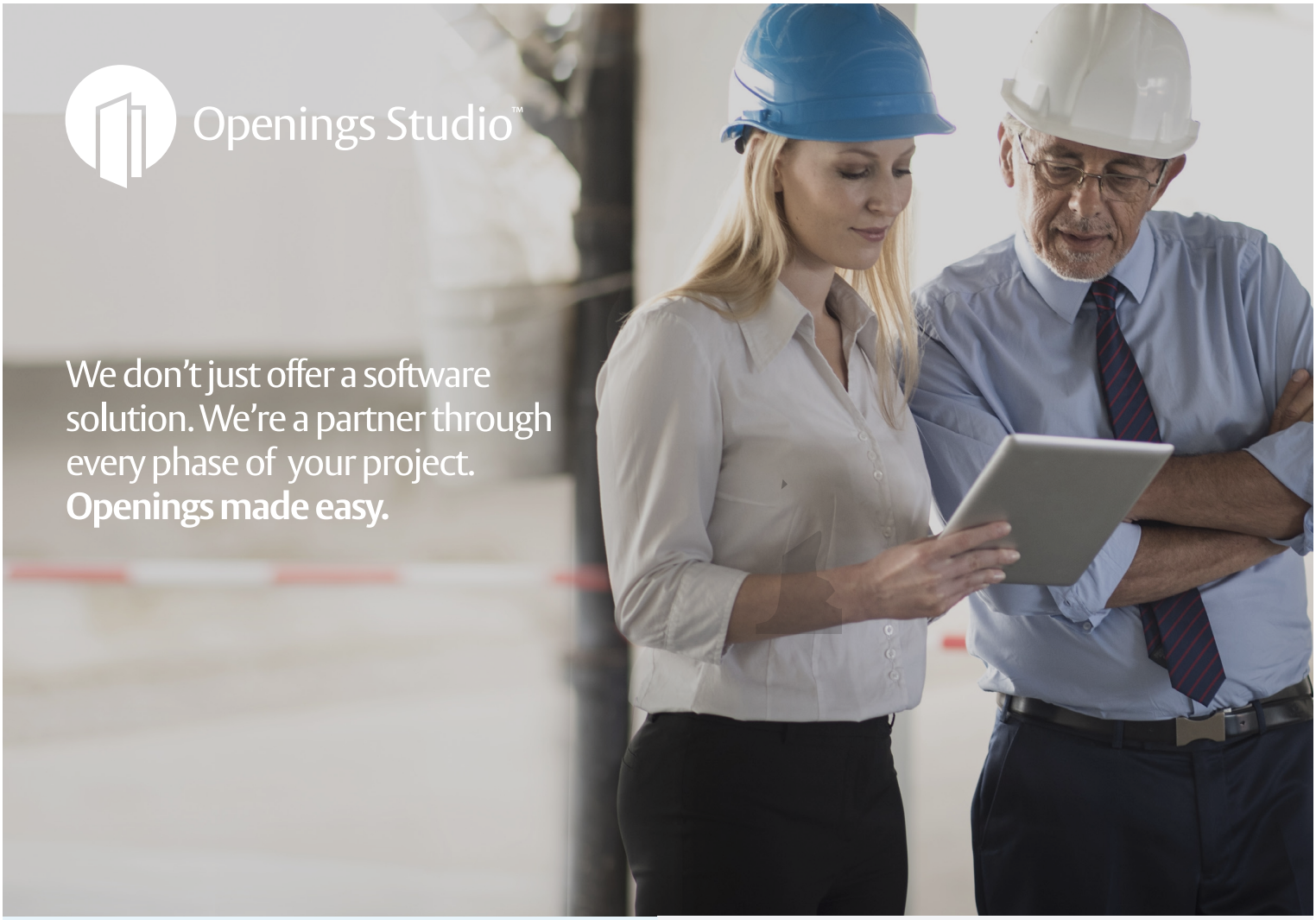

Project Coordination

Need help with schedules or NATSPEC specifications on your next project? Openings Studio gives you access to the data and visualisations you need, so you get what you want - how you want it.

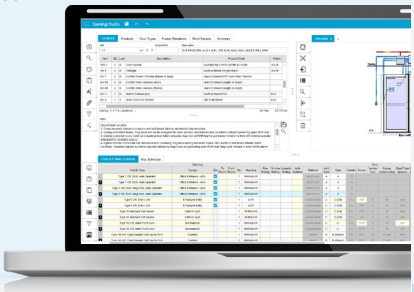

Door Families

Whether all you need is a simple door family, or something more detailed for renderings, we have thousands of easy to customize options. Our families take your model to the next level.

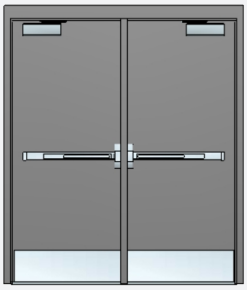

Virtual Design Guides

Virtual Design Guides (VDG's) are an exciting new step in the design process. Our team can help define building and design standards at the start of the process, so you have control of your door openings.

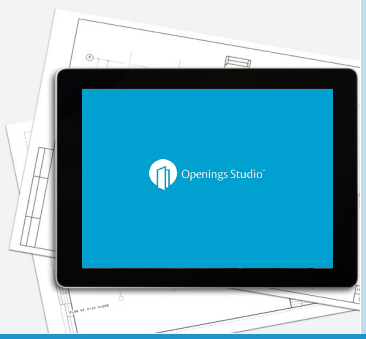

Smart-Tagging

After installation, quick scan frame-applied labels and access part numbers, product guides and catalogue information associated with each opening for hardware verification and facility management - all with

How can **Openings Studio™** help you in the *Design/Tendering* Process?

Adds Value At Every Stage

Provides accurate door hardware costs for construction cost estimation to speed up the process.

BIM Integration Promotes Collaboration

Transfers information across platforms (BIM software and Openings Studio™) and BIM Level of Development (LOD) seamlessly.

Maintain Parameters Without Hassle

Ensures information is accurate, consistent and complete from design proposal to project completion.

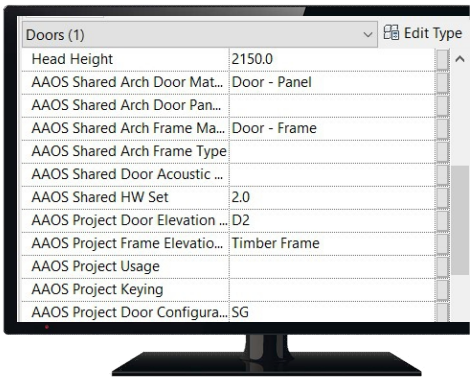

Report Ready For All Stakeholders

General all types of reports to be used by Clients, Engineers, Contractors, Quantity Surveyors and other consultants.

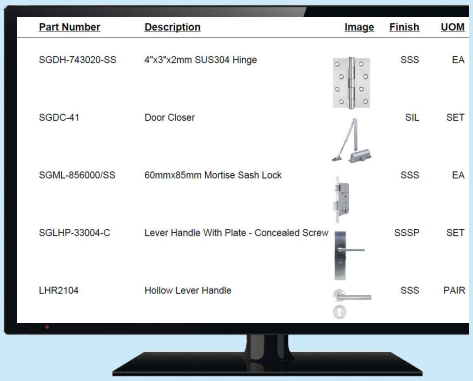

Hinges

ASSA ABLOY

Experience a safer
and more open world

Features & Benefits

Door Hinges

Key features:

- EN Series – Standard Imperial Hole Pattern
- ANSI Series – made to ANSI template hinge dimensions A156.7
- Fire Rated
- SS304 standard, SS316 option
- EN Series 200,000 cycles tested
- ANSI A156.1 Grade 1 2.5 Million cycles tested
- Compliant or tested and passed EN1935; ANSI A156.1

Benefits:

- Suitable for Interior and Exterior doors (Wooden & Metal)
- High corrosion resistance
- Suitable for fire rated doors
- High durability
- Friction resistance

CE Mark

Technical details:

- EN Series
- ANSI Series
- 2 Ball Bearing
- 4 Ball Bearing
- Full Mortise
- Fully Concealed
- Suitable for high traffic and commercial application
- Suitable for door weight up to 120kg
- 2 Knuckles (Lift – off)
- 3 Knuckles
- 5 Knuckles
- Hospital Tip
- Non-removal pin (NRP)
- Electric Wires (CC4, CC6, CC8)

General Finish:

- Satin Stainless
- Polish Stainless Steel
- Polished Brass
- Antique Bronze

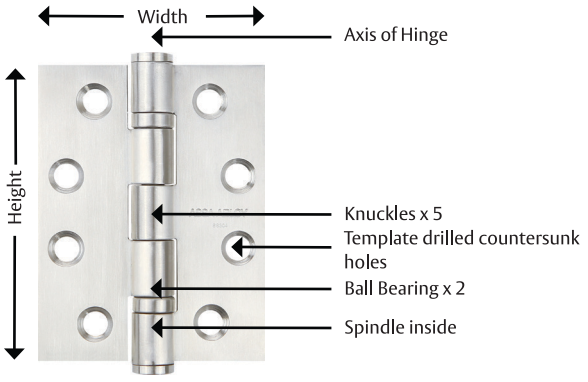

*__Note:__ Some of the abovementioned features may not be applicable for all models of hinges.
CE Marking and Fire Rating is applicable for only Stainless Steel SS 304 Grade Ball Bearing hinges.

ASSA ABLOY offers a comprehensive range of hinges meeting all requirements, from the simplest case to the most demanding security door.
ASSA ALBOY hinges are available with a number of security enhancing functions, e.g. security pins that make it impossible to lift the door off.

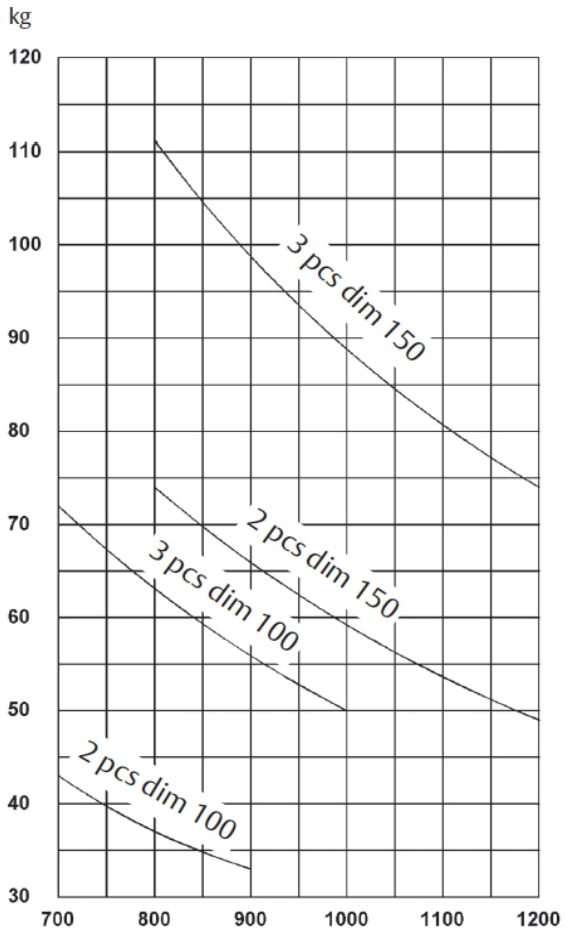

Height and number of hinge recommended in Sweden.
When door closer is fitted, 20% is added to the door weight.
When back-check door closer is fitted, +75% is added to the door weight.

Maintenance

As with all designs that include moving parts, hinges need some maintenance to function faultlessly over their entire life time. The amount of maintenance needed depends on exp. frequency, strain and environment.

Maintenance consist of:
- Overhaul
- Cleaning
- Lubrication

Overhaul
Overhaul of hinges should be carried out frequently. The overhaul is determined by opening frequency and load.

You should control the following at least once a year:
- Function
- Need for lubrication
- Possible loose screws

This can be carried out in connection with the overhaul and control of locks, door closer, weather seals, glass panes, putty and painting.

Cleaning
As hinges wear, a fine black dust is spread around the bearing The dust also often settles on the frame and the door window/hatch. The best way to avoid the dust is to keep the hinges well-lubricated.

Lubrication
For lubrication of hinges, a water-free mineral or synthetic grease should be used. Do not use oil unless it is absolutely impossible to apply grease. It is very important to use right kind of lubricant, since stresses can be very high, especially on journal-supported hinges.

Function
Hinges should function easily, be undamaged and securely fastened in both frame and door. The door should not touch frame or threshold when it is closed. Damaged or worn-out hinges should be replaced. Loose screws should be tightened. Loose hinges impair the door function, increase wear on the hinges and make breaking-in easier.

Screws in newly installed doors must always be tightened after a few months when the wood in the frame and the door has dried.

When necessary, the hinges are adjusted according to the instructions below. However, the reason for adjustment should be carefully analysed before the actual adjustment is carried out. Hinges often get the blame for a badly functioning door, when in fact the real reason is a carelessly mounted frame or subsidence in the house. It is useless for example to adjust the hinges of a heavy door if the frame is not fixed to the wall property.

Before adjusting the hinges, check the following:
- Is the frame straight and level ?
- Are the diagnoal dimensions of the frame correct ?
- Is the frame side straight in the rebate (does not bulge inwards or outwards) ?
- Is the frame rebate width correct ?
- Is the frame rebate width the same at different heights ?
- Is frame side straight ?
- Is the frame securely mounted in the wall ?
- Is the wall stable enough to hold the frame ?
- Is the frame mounted so that it cannot warp ?
- Are the hinges securely fastened in the frame and door ?
- Is the door leaf straight and level ?

Do not attempt to adjust the hinges if you cannot answer all the above questions in the affirmative.

Ball Bearing Hinges

Specifications

Application:

There are a few variables which must be considered and guidelines to be observed, in order to determine hinge selection for individual doors. It is recommended that the guidelines contained in this catalogue are followed. When reading dimensions the first figure always indicates the height and the second indicates the width and the third indicates the thickness.
e.g. 102mm x 76mm x 3mm

Fixing screws:

Each butt hinge is supplied with the appropriate sized wood screws. Metal door screws are optional

- 8 Gauge screws for 76mm width hinges
- 10 Gauge screws for 102mm and greater width hinges

Hinge height:

The appropriate hinge height for any job is dependent upon the door width, thickness and weight. The height of the hinge is the length of the flap, not including the tips of the pin, as shown in the below diagram.

Hinge width:

The door thickness and door jamb width (also trim size if applicable) determine the width of the hinge required. The width is measured across the leaves when the hinge is fully opened as shown in the below diagram.

Table 1 Reference NFPA-80 Table 6.4.3.1 2010 Builders Hardware Mortise, Surface, and Full-Length Hinges, Pivots or Spring Hinges for Swinging Doors

Mortise and Surface Hinges, Pivots or Spring Hinges for Swinging Doors. Doors up to 60"(1.52m) in height shall be provided with two hinges and an additional hinge for each additional 30" (0.76m) of door height or fraction thereof. The distace beween hinges shall be permitted to exceed 30" (0.76m). Where spring hinges are used, at least two shall be provided.

	Maximum Door Size		Minimum Hinge Size		
Maximum Door Rating Hours	**Width ft. (m)**	**Height ft. (m)**	**Height in. (mm)**	**Thickness in (mm)**	**Type Hinge**
For 1¾ (44.5mm) or Thicker Doors					
3 or less	4 (1.22)	10 (3.05)4	½" (114.3)	0.180 (4.57)	Steel, Mortise or Surface
3 or less	4 (1.22)	8 (2.44)	4½" (114.3)	0.134 (3.40)	Steel, Mortise or Surface
1½ or less	3 1/6 (0.96)	8 (2.44)	6" (152.4)0	.225 (5.72)	Steel-Olive Knuckle or Paumelle
3 or less	4 (1.22)	10 (3.05)4	" (101.6)0	.225 (5.72)	Steel Pivots (including top, bottom and intermediate)
1½ or less	3 (0.91)	5 (1.52)	4" (101.6)0	.130 (3.30)	Steel, Mortise or Surface
1½ or less	2 (0.61)	3 (0.91)	3" (76.2)	0.092 (2.34)	Steel, Mortise or Surface
3 or less	3 (0.91)	7 (2.13)	4½" (114.3)	0.134 (3.40)	Steel, Mortise or Surface (labeled self closing spring type)
3 or less	3 (0.91)	7 (2.13)	4" (101.6)0	.105 (2.67)	Steel, Mortise or Surface (labeled self closing spring type)

RECOMMENDATION FROM GAI S1.02 Hinges

- Hinge positions relative to door size/mass
- A Bit of History - In theory, the best place for the top hinge is right at the top of the door, and the best place for the bottom hinge is right at the bottom. Historically, this was never done, because doors were constructed with mortice and tennon joints in the top and bottom rails.
- This joint was not suitable for fixing a hinge to, so the hinges were fixed closer to the center line to avoid the problem area. The tradition survives today, though the reason for it no longer exists in many modern door constructions.
- Performance Doors - Any fire, smoke, acoustic or other performance door will have been tested with its hinges in given positions. The same number and positions of the hinges must always be used in order to maintain the validity of any test evidence or certification.
- The positions will be detailed on the door's installation instructions, which are usually packed with the doors. If there is a need to change a hinge position, consult the door manufacturer and take the advice given.
- Non-performance Doors & Unusual Doors - In these cases, there might not be any recommendations available for hinge fixing position from the door manufacturer or joinery specialist. Hinge manufacturers can often give helpful advice.
- BS EN 1935 recommends two hinges at the top and one at the bottom of self-closing doors (Second hinge fitted within top 1/3rd of door). A door closer puts extra strain on a top hinge, especially if it has either backcheck or hold open functions.
- Putting the third hinge near the top hinge helps to support it and spread the forces from the backcheck or pulling off the hold open. But remember, if the door is a fire or smoke door, the third hinge will probably have been in the middle for any testing. Always check certification before suggesting changes.

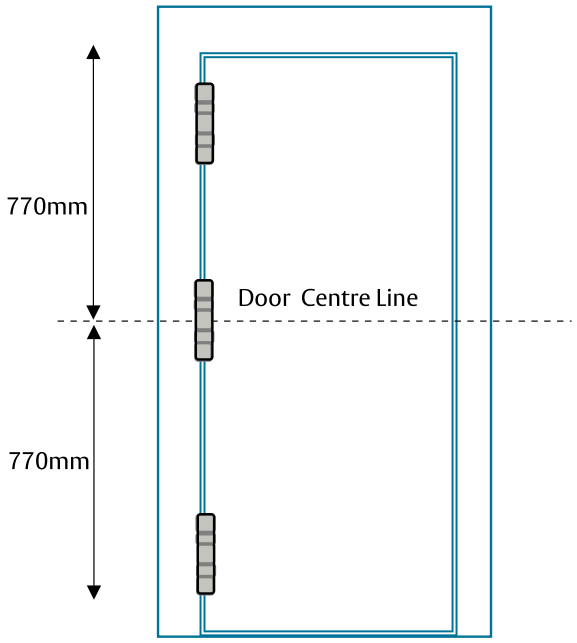

Standard Doors - 2040 x 926mm

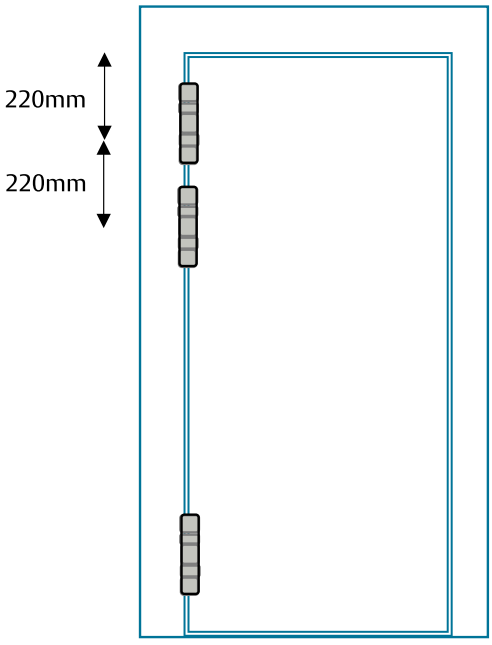

DOOR WITH CLOSER

Second hinge fixed close to top hinge, helping to carry the door mass

Features:

- 2 Ball bearing butt hinge
- Button tip
- Template hole

Ball bearing hinges for Timber door

Material	Size (mm)	Finishing	Art. No.
SS304	102 x 76 x 3	Satin	AH2BB-02 US32D
		Polish Brass	AH2BB-02 US3
		Black Matt	AH2BB-02 US19
	127 x 89 x 3	Satin	AH2BB-04 US32D
		Polish Brass	AH2BB-04 US3
		Black Matt	AH2BB-04 US19
SS316	102 x 76 x 3	Satin	AH2BB-08 US32D
	127 x 89 x 3	Satin	AH2BB-09 US32D

Ball bearing hinges for Metal door

Material	Size (mm)	Finishing	Art. No.
SS304	102 x 76 x 3	Satin	AH2BB-02 M6 US32D
		Polish Brass	AH2BB-02 M6 US3
		Black Matt	AH2BB-02 M6 US19
	127 x 89 x 3	Satin	AH2BB-04 M6 US32D
		Polish Brass	AH2BB-04 M6 US3
		Black Matt	AH2BB-04 M6 US19
SS316	102 x 76 x 3	Satin	AH2BB-08 M6 US32D
	127 x 89 x 3	Satin	AH2BB-09 M6 US32D

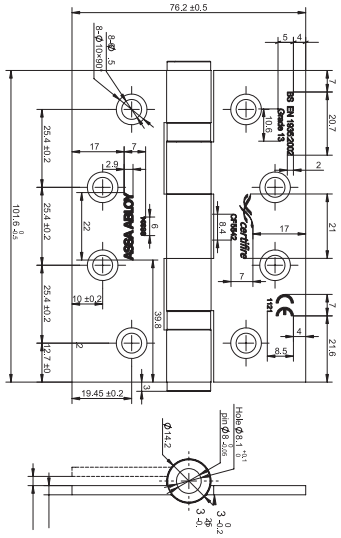

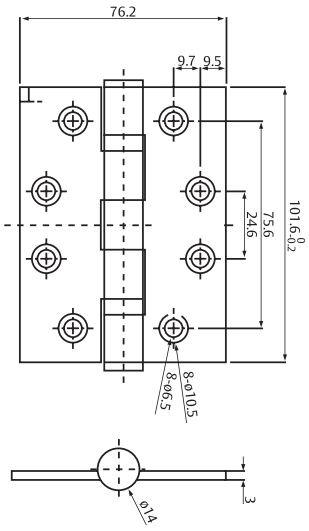

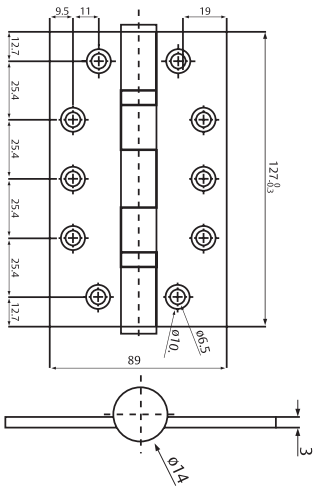

Door Hinges - Fire Rated

ASSA ABLOY

Standard Duty Two Ball-Bearing Stainless Steel Hinge

Model No. & Dimensions: ***2BB 4.0" X 3.0" X 3.0mm, 2BB 4.0" X 4.0" X 3.0mm, 2BB 4.5" X 4.0" X 3.0mm, 2BB 4.5" X 4.5" X 3.4mm***

Technical Details:

- 2 Ball- Bearing 304 Stainless Steel
- Non-rising pin
- Template holes
- ANSI GRADE 2
- EN1154 483113

Finish: 605; 629; 630; AB

Heavy Duty Four Ball-Bearing Stainless Steel Hinge

Model No. & Dimensions: ***AH4BB-10: 127x102x4.8mm - SSS 304***
AH4BB-11: 127x102x4.8mm - SSS 316

Technical Details:

- 4 Ball-Bearing 304 Stainless Steel
- Non-rising pin
- Template holes
- ANSI GRADE 1

Finish: 605; 629; 630; AB

Standard Duty Two Ball-Bearing Electric Hinge

Model No. & Dimensions: ***2BB 4.5" X 4.0" X 3.4mm CC4/CC6/CC8, 2BB 4.5" X 4.5" X 3.4mm CC4/CC6/CC8***

Technical Details:

- 2 Ball-Bearing 304 Stainless Steel
- Non-rising pin
- Template holes
- ANSI GRADE 2
- EN1154 483113

Finish: 605; 629; 630; AB

HIP

Flush Hinge

Model No.: ***AA-FH-01***

Description: Stainless Steel Flush hinge

Art. No.	L	W	T	Door Mass
AA-FH-01 US32D	101	79	2.5	40 kg

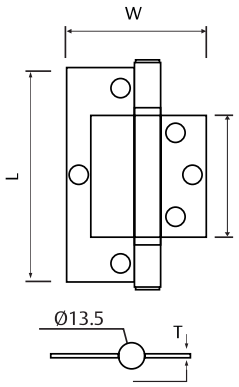

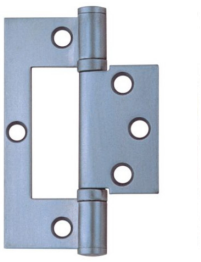

Lift Off Hinge

Model No.: ***AA-LH-01, AA-LH-02***

Description: Stainless Steel Lift Off hinge

Art. No.	L	W	T	Door Mass
AA-LH-01 US32D	100	88	3	40 kg
AA-LH-02 US32D	127	100	3	40 kg

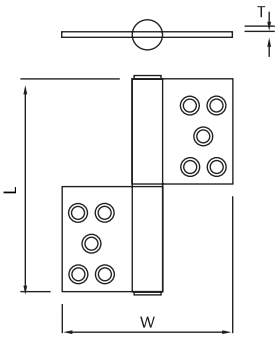

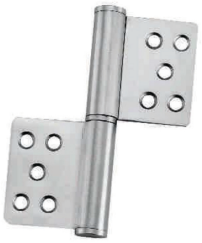

Spring Hinge

Model No.: ***AA-SH-01, AA-SH-02***

Description: Stainless Steel Single Action Spring hinge

Art. No.	L	W	T	Door Mass
AA-SH-01 US32D	102	102	3	40 kg
AA-SH-02 US32D	102	76	3	40 kg

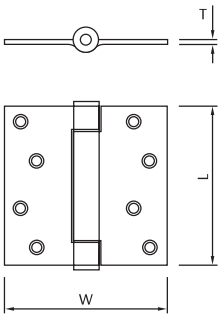

Concealed Hinge

Model No.: ***CH007-01Z, CH007-02Z, CH007-03Z, CH007-04Z, CH007-05Z, CH007-06Z, CH007-07Z***

Description: Zinc Die Cast Concealed Hinge

Finish: Satin Nickel Finish

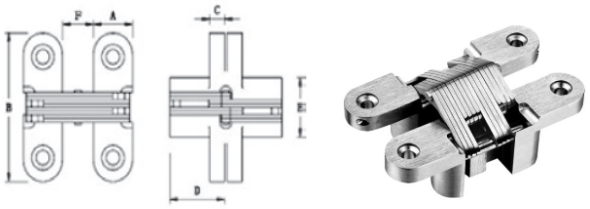

Art.No.	Size	A	B	C	D	E	F
CH007-01Z US15	12x60	12	60	5.8	17.5	29	8
CH007-02Z US15	13x45	12.5	44.5	5.2	18.5	18.3	7.5
CH007-03Z US15	16x70	16	69.5	7	23	33.2	10.5
CH007-04Z US15	19x95	19	95	9.2	26.6	51	11.5
CH007-05Z US15	25x117	25.2	117	11.2	36	64	18
CH007-06Z US15	28x118	28	118	9.8	41	61.5	21
CH007-07Z US15	34x140	34	138	11.2	50	75	27.5

Concealed Hinge

Model No.: ***CH007-04S, CH007-05S, CH007-06S, CH007-07S***

Description: Stainless Steel Concealed Hinge

Finish: Satin Stainless Steel Finish

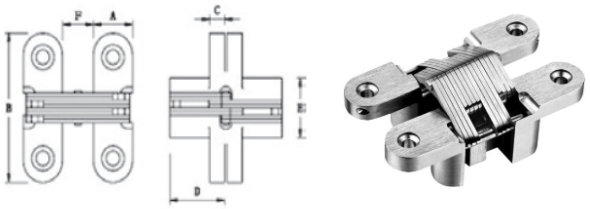

Art.No.	Size	A	B	C	D	E	F
CH007-04S US32D	19x95	19	95	10	27.5	50.2	12.5
CH007-05S US32D	25x117	25.2	116.5	11.2	36	64	15.6
CH007-06S US32D	28x118	28	118	10.5	41	60.5	20
CH007-07S US32D	34x140	34	138	12.3	50	75	26.5

2D Concealed Adjustable Hinge

Art. No.: ***AA-3CH-03 US32D***

Description: Stainless Steel
Plastic Cover in Silver Finish
Wooden door and frame application

2D Adjustment: Left/Right +- 1.5mm
Fore/Rear +- 1.5mm

180° Max
Max Loading: 80kg (2Nos)
Minimum Door Thickness: 40mm
Minimum Door Width: 1000mm

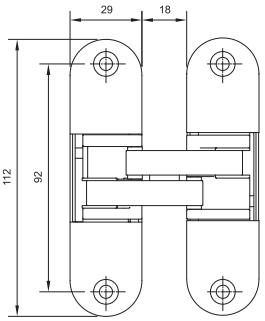

3D Concealed Adjustable Hinge

Art. No.: ***AA-3CH-05 US32D***

Description: Stainless Steel
Plastic Cover in Silver Finish
Wooden door and frame application

2D Adjustment: Up and Down : +-2mm
Left/Right +- 1.5mm
Fore/Rear +- 2mm

180° Max
Max Loading: 120kg (2Nos)
Minimum Door Thickness: 40mm
Minimum Door Width: 1000mm

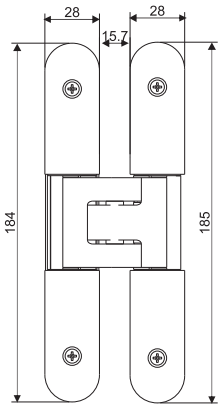

3D Concealed Adjustable Hinge

Art. No.: ***AA-3CH-06 US32D***

Description: Stainless Steel
Wooden door and frame application

2D Adjustment: Left/Right +- 1.5mm
Fore/Rear +- 1.5mm

180° Max
Max Loading: 200kg (2Nos)
Minimum Door Thickness: 60mm
Minimum Door Width: 1000mm

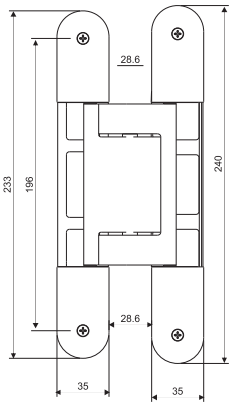

Door Hinge Installation

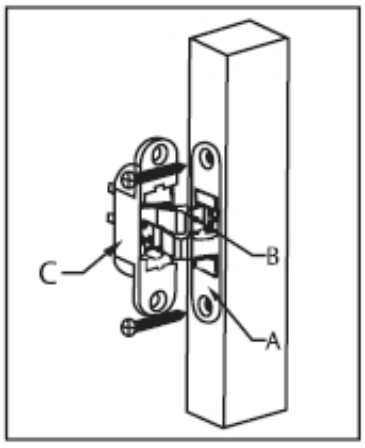

1. Install hinge on the door leaf, with adjusting hole B always up, hinge part A on door leaf & hinge part C on the door frame.

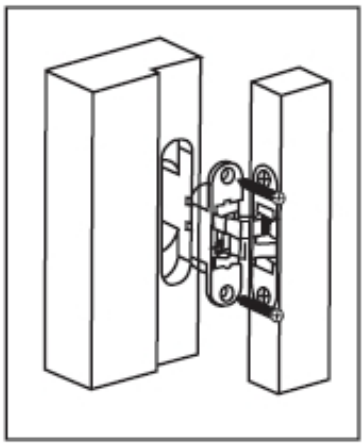

2. Install hinge on door frame.

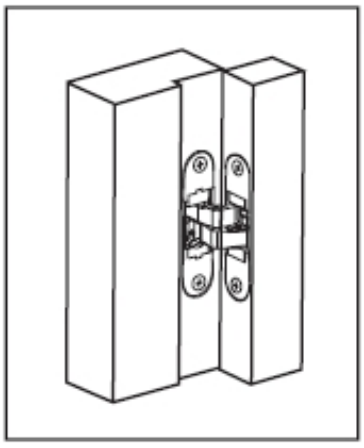

3. Stick the self-adhesive cover plates on the hinge after completion of adjustment.

Hinge Adjustment

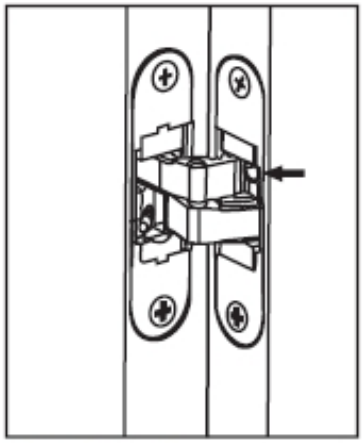

Depth Adjustment:
Use an allen key to twist the screw (arrow marked).
Depth adjustment: ± 1.0mm

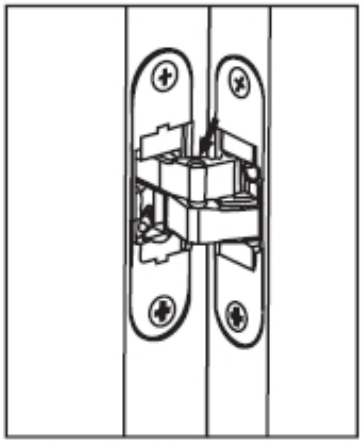

Height Adjustment:
Use an allen key to twist the screw (arrow marked).
Depth adjustment: ± 1.0mm

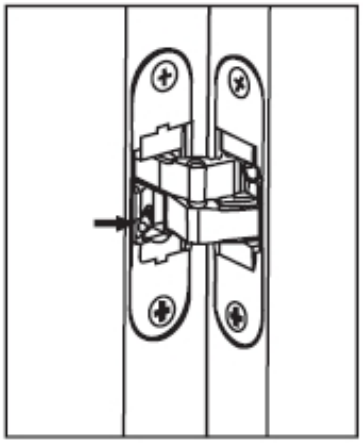

Side Adjustment:
Use an allen key to twist the screw (arrow marked).
Depth adjustment: ± 1.0mm

Markar Continuous Hinges

Hinge failure most commonly begins when doors are opened beyond stop device limits. The resulting kickback shock to the hinges can surpass 1000 lbs. of force. Subsequent racking eventually loosens screws, distorts hinge leaves, pulls open knuckles, damages bearings or creates other serious damage to standard butt hinges as well as the door frame itself.

Markar Continuous Hinges provide the answer by distributing shock forces evenly, significantly reducing wear and tear to the frame and door.

Other important benefits include:

- Enhanced security - prevents insertion of objects between the door and frame
- Easy alignment of electrical transfers and monitoring switches
- Reduced binding.
- Less force required to open than butt hinges

There are many different models to choose from with a variety of configurations, options and materials.

HIP

Pin & Barrel Stainless Steel Continuous Hinges

The Markar 300 Series is manufactured from heavy-duty 14-gauge stainless steel and are well suited for high-traffic, high-abuse doors. These hinges save on special door and frame preparation charges and makes the installer's job easier. A wide variety of configurations are available, including models with optional Adjust-A-Screw fasteners allow even more flexibility in retrofits and new installations.

Standard Features:

- 3/16' diameter stainless steel rod
- Life-long medical bearings
- Heavy-duty 14-gauge stainless steel

Models Available:

- Edge mount
- Full surface / flush mount
- Full surface 1/8" inset
- Half surface
- Half mortise
- Hinge guard
- Edge guard
- Full surface / swing clear
- Custom hinges available

Fire Rating:

- 20 minutes - wood doors
- 90 minutes - hollow metal and composite core wood fire doors
- 3 hours-hollow metal doors

Certifications:

As part of the integrated system, meets Federal Emergency Management Agency (FEMA) 320 and 361 and ICC 500 requirements, as certified by Underwriters Laboratory Consult factory for system requirement. ANSI/BHMA A156.26 Grade 1

Pin & Barrel Carbon Steel Continuous Hinges

The Markar 200 Series hinge is used on many of today's high-traffic, high-abuse interior doors. It can be used on both fire-labelled and non-labelled openings. Zinc plating is standard on all 200 Series hinges.

Standard Features:

- 3/16' diameter stainless steel rod
- Life-long medical bearings
- Heavy-duty 14-gauge stainless steel
- Zinc-Plated

Models Available:

- Edge mount.
- Full surface/flush mount
- Full surface 1/8" inset
- Half surface

Fire Rating:

- Classified in accordance with Uniform Building Code Standard 7-2 for positive pressure
- 20 minutes - wood doors
- 90 minutes - hollow metal and composite core wood fire doors
- 3 hours-hollow metal doors

Certifications:

As part of the integrated system, meets Federal Emergency Management Agency (FEMA) 320 and 361 and ICC 500 requirements, as certified by Underwriters Laboratory. Consult factory for system requirements. ANSI/BHMA A156.26 Grade 1

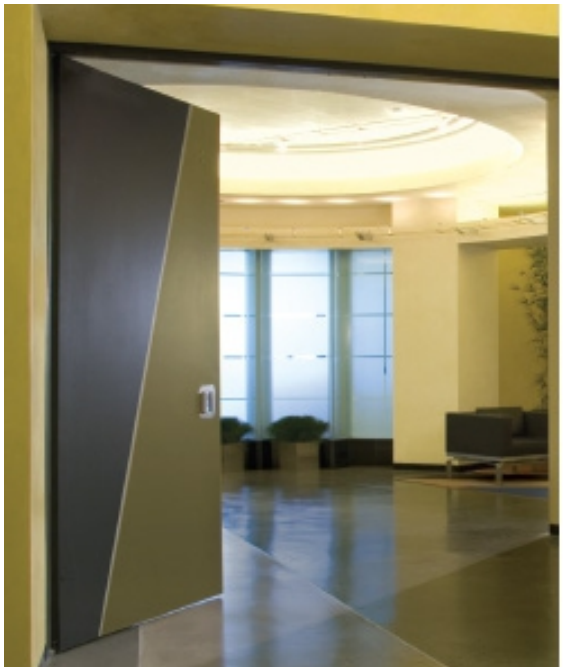

Pin & Barrel Aluminium Continuous Hinges

The Markar 100 Series hinge is extruded using 6063-T6 aluminum alloy, giving it exceptional strength and durability.

Standard Features:

- 3/16' diameter stainless steel rod
- Life-long medical bearings
- Extruded aluminum 6063-T6 alloy

Models Available:

- Edge mount.
- Full surface/flush mount
- Full surface 1/8" inset
- Half surface
- Edge guard
- Hinge guard

Certifications:

ANSI/BHMA A156.26 Grade 2

General Information

How to Select Product

Pivot sets provide the best possible means of hanging a door. They are designed to work with the laws of physics to provide long-lasting performance and reliability.

The weight of the door is supported at the bottom by the floor

- Uses principles of gravity to its advantage
- Door swings with less resistance
- Heavier doors can be accommodated

Reduced stress on frame

- Fasteners are in shear, not tension
- Eliminates door sag
- Vertically adjustable

Heavy-duty hardened steel spindles

- Thrust bearing supports vertical load
- Needle bearings and bushings for lateral force
- Extra heavy-duty models also have an additional surface applied thrust bearing to handle heavier or high-traffic doors

Offset pivots provide better weight distribution and can accommodate taller doors.

Intermediate pivots are used for alignment and to ensure proper installation of bottom pivot or floor closer.

Center hung pivots are used for aesthetics or if the pivot point is going to be moved nearer the lock edge of the door.

PIVOTS DO NOT RETURN DOORS TO CENTER. Pivots in this section are for door hanging means only. For door control see door closer catalog sections.

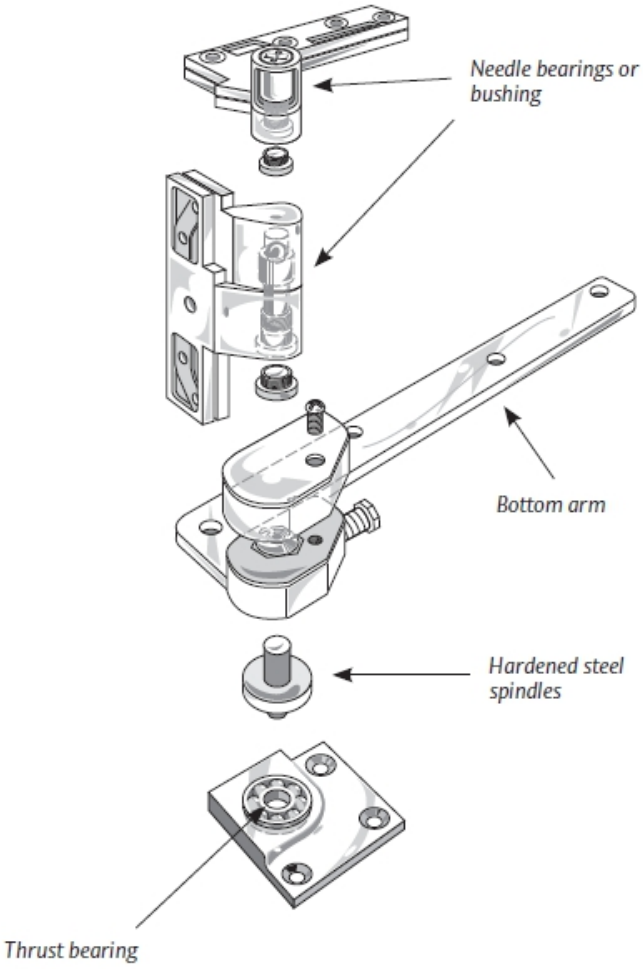

147 Pivot set and M19 Intermediate pivot shown (recommended)

Offset Hung

Application

- Exterior or Interior Doors
- Lead-Lined, Heavy, High Traffic Doors
- Weight to 1,750 lbs.
- Door Width up to 4'0' (1219mm)
- Handed

Product Description & Features

- 180 top pivot included
- ML19 intermediate pivot required (order separately)
- 3/4" (19mm) offset (measured from centerline of pivot to face of door)
- Door edges must be beveled in 1/8 in 2
- Bottom pivot mortised into floor
- Available to accommodate lead in door thickness 1-3/4" (44mm), 2 (51mm), 2-1/4" (57mm), 2-1/2" (64mm) , or 3' (76mm) - specify when ordering
- Additional thrust bearing for greater load capacity
- Doors will swing 180°, trim permitting
- Non-ferrous base material for top pivot
- Doors 60' (1524mm) to 90' (2286mm) in height should use one intermediate pivot. Each additional 30" (762mm) of door height warrants another intermediate pivot
- Furnished with wood and machine screws

Optional Features

- Extended spindles available in 1/2" (13mm) increments up to 2" (51mm) longer than standard.

Compliance

- Available for fire door assemblies up to three hours (ferrous material). Specify Fl117.
- Intermediate pivot required by UL. Specify FML19 (order separately). Note: UL listing for 1-3/4" thick doors only
- For 20-minute label suffix "-20" to the part number
- ANSI/C07111

** Door size & weight guidelines are determined using the appropriate number of intermediate pivots.*

Lever Handlesets

ASSA ABLOY

Experience a safer
and more open world

Features and Benefits

Stainless Steel Lever Handles

Features:
- Made of Stainless Steel 304
- 200,000 cycles tested
- Exclusive range

Benefits:
- High corrosion resistance
- High durability
- Choice of Solid and Tubular lever design

Technical details:
- Door thickness required: 30 to 50mm
- Spindle - 8mm x 8mm
- Suitable for hinge timber, metal doors
- All lever handles come complete with two euro cylinder escutcheons
- Roses are designed to fit back to back and fixing is concealed by the use of a slip on outer rose
- Finish: US32D

The Stainless Steel door furniture range offers a selection of stylish and durable levers on round rose.

Solid Stainless Steel Lever Handle

Model No.: ***ASL - 010***

Description: Solid Lever on Rose
Dimensions: Length - 127mm
Spindle: 8mm x 8mm Straight Spindle Standard
Round Rose: Ø54mm x 8mm

Finishing	*Art. No.*
SS matt	ASL-010 US32D
Polish Brass	ASL-010 US3
Black Matt	ASL-010 US19

Solid Stainless Steel Lever Handle

Model No.: ***ASL - 020***

Description: Solid Lever on Rose
Dimensions: Length -130mm
Spindle: 8mm x 8mm Straight Spindle Standard
Round Rose: Ø54mm x 8mm

Finishing	*Art. No.*
SS matt	ASL-020 US32D
Polish Brass	ASL-020 US3
Black Matt	ASL-020 US19

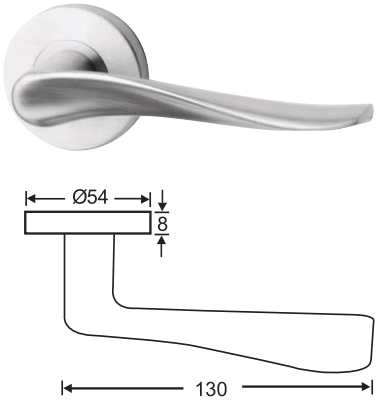

Solid Stainless Steel Lever Handle

Model No. ***ASL - 030***

Description: Solid Lever on Rose
Dimensions: Length - 120mm
Spindle: 8mm x 8mm Straight Spindle Standard
Round Rose: Ø54mm x 8mm

Finishing	*Art. No.*
SS matt	ASL-030 US32D
Polish Brass	ASL-030 US3
Black Matt	ASL-030 US19

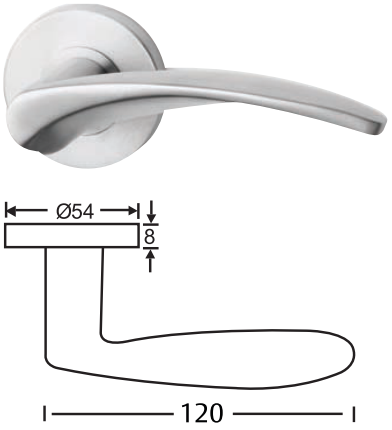

Solid Stainless Steel Lever Handle

Model No.: ***ASL - 040***

Description: Solid Lever on Rose
Dimensions: Length - 128mm
Spindle: 8mm x 8mm Straight Spindle Standard
Round Rose: Ø54mm x 8mm

Finishing	*Art. No.*
SS matt	ASL-040 US32D
Polish Brass	ASL-040 US3
Black Matt	ASL-040 US19

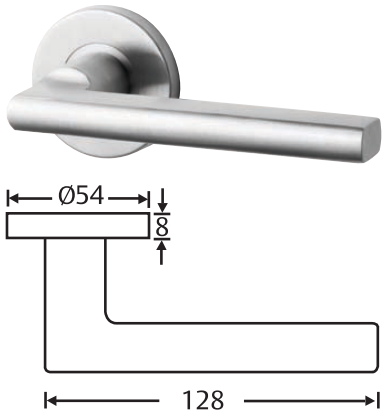

Solid Stainless Steel Lever Handle

Model No.: ***ASL - 050***

Description: Solid Lever on Rose
Dimensions: Length - 130mm
Spindle: 8mm x 8mm Straight Spindle Standard
Round Rose: Ø54mm x 8mm

Finishing	*Art. No.*
SS matt	ASL-050 US32D
Polish Brass	ASL-050 US3
Black Matt	ASL-050 US19

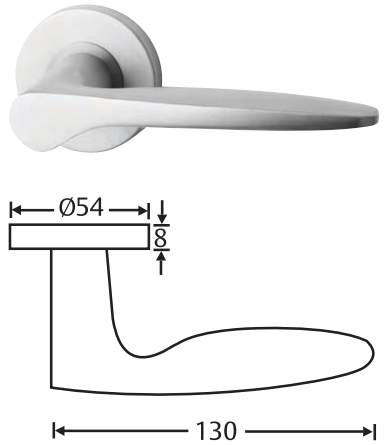

Solid Stainless Steel Lever Handle

Model No.: ***ASL - 060***

Description: Solid Lever on Rose
Dimensions: Length - 122mm
Spindle: 8mm x 8mm Straight Spindle Standard
Round Rose: Ø54mm x 8mm

Finishing	*Art. No.*
SS matt	ASL-060 US32D
Polish Brass	ASL-060 US3
Black Matt	ASL-060 US19

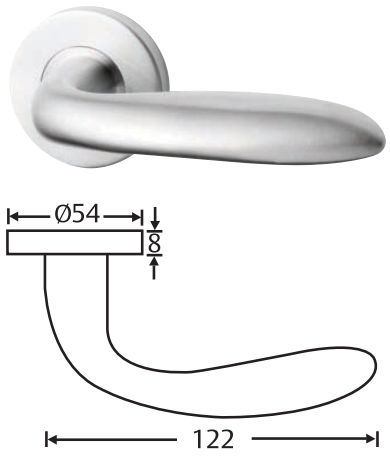

Solid Stainless Steel Lever Handle

Model No.: ***ASL - 070***

Description: Solid Lever on Rose
Dimensions: Length - 128mm
Spindle: 8mm x 8mm Straight Spindle Standard
Round Rose: Ø54mm x 8mm

Finishing	*Art. No.*
SS matt	ASL-070 US32D
Polish Brass	ASL-070 US3
Black Matt	ASL-070 US19

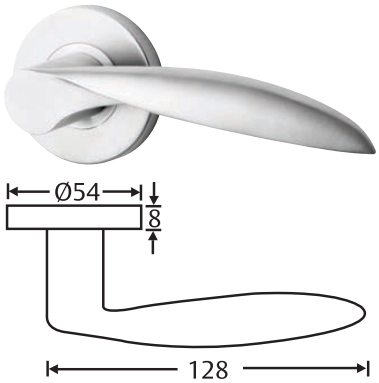

Solid Stainless Steel Lever Handle

Model No.: ***ASL - 080***

Description: Solid Lever on Rose
Dimensions: Length - 125mm
Spindle: 8mm x 8mm Straight Spindle Standard
Round Rose: Ø54mm x 8mm

Finishing	*Art. No.*
SS matt	ASL-080 US32D
Polish Brass	ASL-080 US3
Black Matt	ASL-080 US19

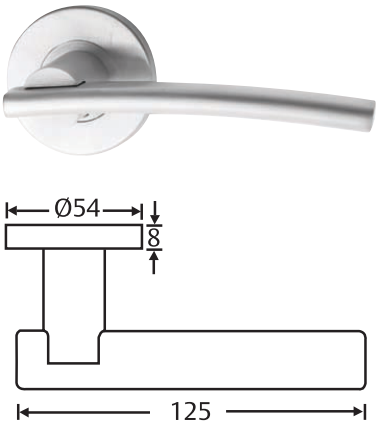

Solid Stainless Steel Lever Handle

Model No.: ***ASL - 090***

Description: Solid Lever on Rose
Dimensions: Length - 128mm
Spindle: 8mm x 8mm Straight Spindle Standard
Round Rose: Ø54mm x 8mm

Finishing	*Art. No.*
SS matt	ASL-090 US32D
Polish Brass	ASL-090 US3
Black Matt	ASL-090 US19

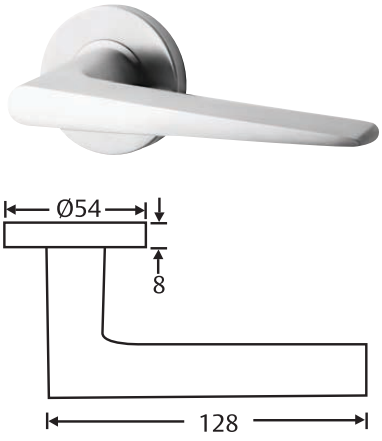

Tubular Stainless Steel Lever Handle

Model No.: **ATL - 010**

Description: Tubular Lever on Rose
Dimensions: Length - 130mm
Spindle: 8mm x 8mm Straight Spindle Standard
Round Rose: Ø54mm x 8mm

Finishing	Art. No.
SS matt	ATL-010 US32D
Polish Brass	ATL-010 US3
Black Matt	ATL-010 US19

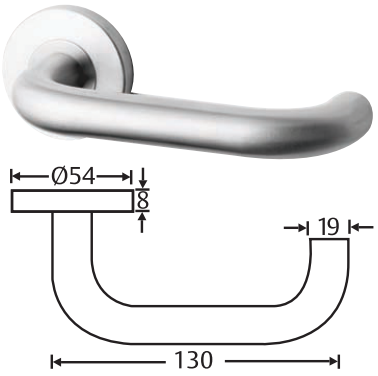

Tubular Stainless Steel Lever Handle

Model No.: **ATL - 020**

Description: Tubular Lever on Rose
Dimensions: Length - 133mm
Spindle: 8mm x 8mm Straight Spindle Standard
Round Rose: Ø54mm x 8mm

Finishing	Art. No.
SS matt	ATL-020 US32D
Polish Brass	ATL-020 US3
Black Matt	ATL-020 US19

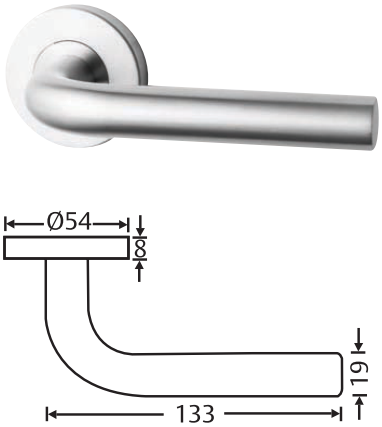

Tubular Stainless Steel Lever Handle

Model No.: **ATL - 030**

Description: Tubular Lever on Rose
Dimensions: Length - 133mm
Spindle: 8mm x 8mm Straight Spindle Standard
Round Rose: Ø54mm x 8mm

Finishing	Art. No.
SS matt	ATL-030 US32D
Polish Brass	ATL-030 US3
Black Matt	ATL-030 US19

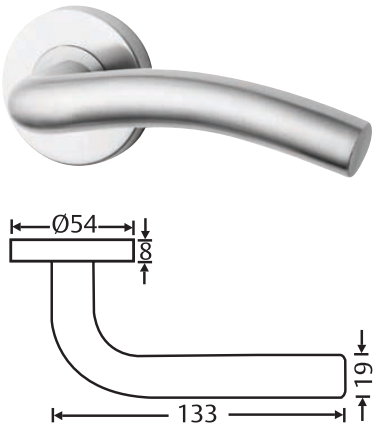

Tubular Stainless Steel Lever Handle

Model No.: ***ATL - 040***

Description: Tubular Lever on Rose
Dimensions: Length - 133mm
Spindle: 8mm x 8mm Straight Spindle Standard
Round Rose: Ø54mm x 8mm

Finishing	*Art. No.*
SS matt	ATL-040 US32D
Polish Brass	ATL-040 US3
Black Matt	ATL-040 US19

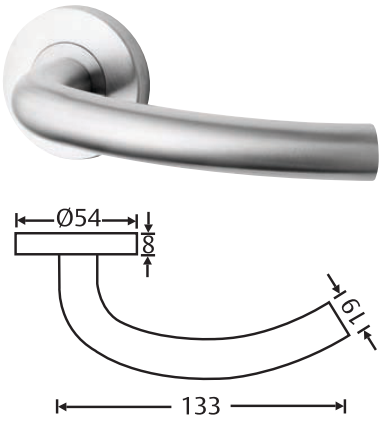

Tubular Stainless Steel Lever Handle

Model No.: ***ATL - 050***

Description: Tubular Lever on Rose
Dimensions: Length - 125mm
Spindle: 8mm x 8mm Straight Spindle Standard
Round Rose: Ø54mm x 8mm

Finishing	*Art. No.*
SS matt	ATL-050 US32D
Polish Brass	ATL-050 US3
Black Matt	ATL-050 US19

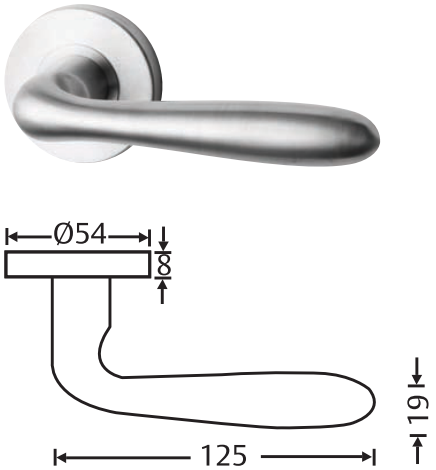

Tubular Stainless Steel Lever Handle

Model No.: ***ATL - 060***

Description: Tubular Lever on Rose
Dimensions: Length - 125mm
Spindle: 8mm x 8mm Straight Spindle Standard
Round Rose: Ø54mm x 8mm

Finishing	*Art. No.*
SS matt	ATL-060 US32D
Polish Brass	ATL-060 US3
Black Matt	ATL-060 US19

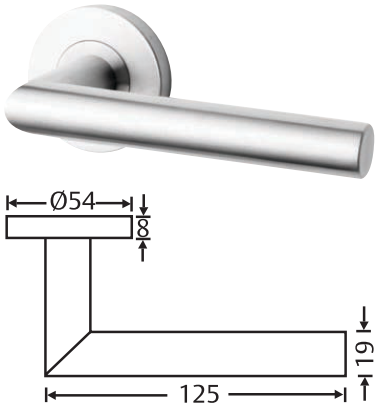

Tubular Stainless Steel Lever Handle

Model No.: ***ATL - 070***

Description: Tubular Lever on Rose
Dimensions: Length - 128mm
Spindle: 8mm x 8mm Straight Spindle Standard
Round Rose: Ø54mm x 8mm

Finishing	*Art. No.*
SS matt	ATL-070 US32D
Polish Brass	ATL-070 US3
Black Matt	ATL-070 US19

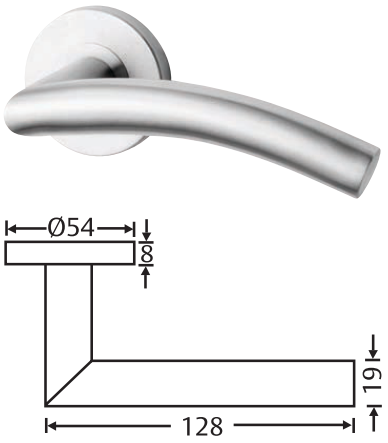

Tubular Stainless Steel Lever Handle

Model No.: ***ATL - 080***

Description: Tubular Lever on Rose
Dimensions: Length - 137mm
Spindle: 8mm x 8mm Straight Spindle Standard
Round Rose: Ø54mm x 8mm

Finishing	*Art. No.*
SS matt	ATL-080 US32D
Polish Brass	ATL-080 US3
Black Matt	ATL-080 US19

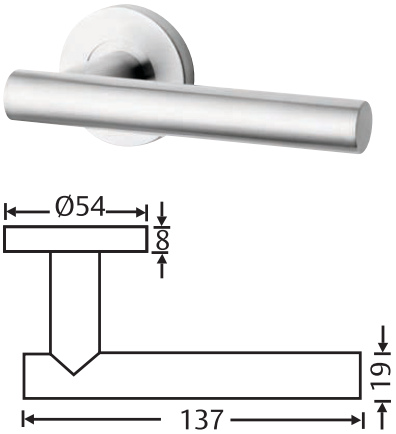

Tubular Stainless Steel Lever Handle

Model No.: ***ATL - 090***

Description: Tubular Lever on Rose
Dimensions: Length - 137mm
Spindle: 8mm x 8mm Straight Spindle Standard
Round Rose: Ø54mm x 8mm

Finishing	*Art. No.*
SS matt	ATL-090 US32D
Polish Brass	ATL-090 US3
Black Matt	ATL-090 US19

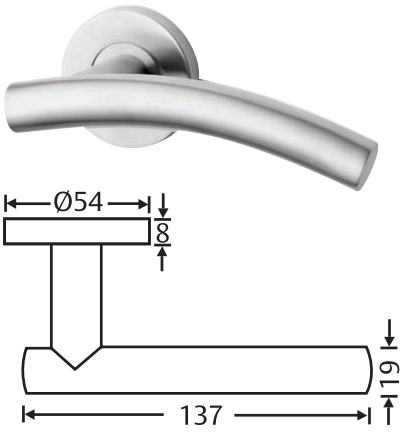

Tubular Stainless Steel Lever Handle

Model No.: ***ATL - 100***

Description: Tubular Lever on Rose
Dimensions: Length - 137mm
Spindle: 8mm x 8mm Straight Spindle Standard
Round Rose: Ø54mm x 8mm

Finishing	*Art. No.*
SS matt	ATL-100 US32D
Polish Brass	ATL-100 US3
Black Matt	ATL-100 US19

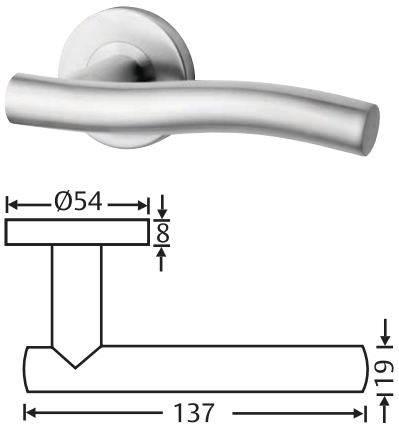

Stainless Steel Escutcheon

Model No.: ***AEP - 010***

Description: Euro profile cylinder escutcheon
Dimensions: Diameter: 54mm, depth: 8mm

Finishing	*Art. No.*
SS matt	AEP-010 US32D
Polish Brass	AEP-010 US3
Black Matt	AEP-010 US19

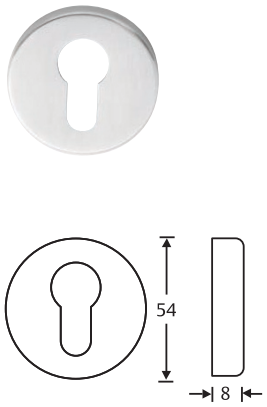

Narrow Profile Lever Handle

Model No.: ***ATL - 201***

Description: Lever handle with narrow profile rose

Finishing	*Art. No.*
SS matt	ATL-201 US32D

Narrow Profile Lever Handle

Model No.: ***ATL - 202***

Description: Lever handle with narrow profile rose

Finishing	*Art. No.*
SS matt	ATL-202 US32D

Narrow Profile Lever Handle

Model No.: ***ATL - 203***

Description: Lever handle with narrow profile rose

Finishing	*Art. No.*
SS matt	ATL-203 US32D

Narrow Profile Lever Handle

Model No.: ***AEP - 050***

Description: Narrow profile escutcheons

Finishing	*Art. No.*
Satin	AEP-050 US32D

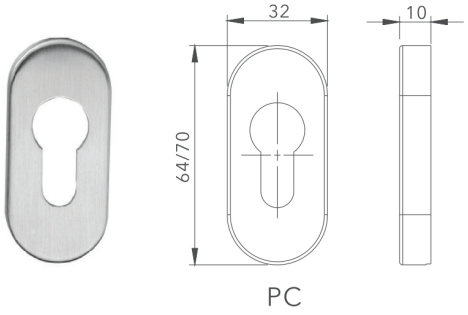

H 1061
Serie Cenerentola design
Luciana Di Virgilio e Gianni Veneziano

H 1060
Serie Alina
design Skidmore, Owings&Merrill

H 1059
Serie Fidelio
design Mauro Carlesi

H 1058
Serie Amica
design Valli Workshop

H 1057
Serie Retrò
design Valli Workshop

H 1056
Serie Quadra
design Valli Workshop

H 1055
Serie Words
design Franco Poli

H 1054
Serie W.W.
design Valli Workshop

H 1052
Serie Supersonic
design Mikhail Leykin

H 1051
Serie Tieste
design Yoshimi Kono

H 1050
Serie Giasone
design Valli Workshop

H 1049
Serie Divara
design Valli Workshop

H 1046
Serie Nais
design Valli Workshop

H 1045
Serie Bess
design Yoshimi Kono

H 1044
Serie Oberon
design Vincent Van Duysen

H 1044 Q
Serie Oberon
design Vincent Van Duysen

H 1043
Serie Alcina
design Matteo Thun

H 1042
Serie Walkiria
design Panacom Architects Arseniy Leonovich

H 1040
Serie Siberia
design Gabriele e Oscar Buratti

H 1039
Serie Fedra
design Jean-Baptiste Sibertin Blanc

H 1037
Serie Teseo
design Valli Workshop

H 1034
Serie Polis
design Decoma Design

H 1027
Serie Dafne
design Studio Carlesi Design

H 1026
Serie Dido
design Antonio Bullo

H 1024
Serie Lolita
design Valli Workshop

H 1022
Serie Ernani
design Valli Workshop

H 1018
Serie Otello
design Marius Schreyer Design

H 1016
Serie Nabucco
design Valli Workshop

H 1004
Serie Antares
design Valli Workshop

H 1003
Serie Croco
design Matteo Thun

Lever Handles - Valli & Valli Series

H 914/8
Serie Medicea
design Pasquale Valli

H 198
Serie Mizar
design Eero Aarnio

H 195
Serie Orchidea
design Valli Workshop

H 192
Serie Prunus
design Valli Workshop

H 179
Serie Aida
design Matteo Thun

H 176
Serie Spiga
design Valli Workshop

H 174
Serie Altair
design Valli Workshop

H 165
Serie Germana
design Valli Workshop

H 163
Serie Sarissa
design Valli Workshop

H 123
Serie Luigi XVI
design Valli Workshop

H 120
Serie Luigi XV
design Valli Workshop

H 4742
Serie Coral
design Valli Workshop

H 4730
Serie White
design Valli Workshop

H 4705
Serie Rhodamine
design Valli Workshop

H 419
Serie Bordeaux
design Valli Workshop

H 417
Serie Indigo
design Valli Workshop

H 416
Serie Garnet
design Valli Workshop

H 415
Serie Scarlet
design Valli Workshop

H 414
Serie Amber
design Valli Workshop

H 412
Serie Lilla
design Valli Workshop

H 44
Serie Pink
design Valli Workshop

HIP

Mortise Lockcases

ASSA ABLOY

Experience a safer
and more open world

Features and Benefits

Mortise Lockcase
AA5100 Series

Features:
- Made of SS 304
- 200,000 cycles tested
- 8 different functions
- Fire rated
- Non-handed: latch reversible
- Compliant to BS EN 12209

Benefits:
- High corrosion resistance
- High durability
- Versatile usage
- Can be used for fire doors

Technical details:
- Center to center: 72mm
- Backset: 60mm
- Door thickness required: 35 to 50mm
- Fits standard cam euro profile cylinder
- Double throw projection deadbolt: 20mm
- Suitable for hinged timber, metal and fire doors
- All mortise lockcases contain suitable strike plates and screws
- Solid Armor front

OPTION: Rebate Kit
55mm backset

The range of ASSA ABLOY mortise lockcases consists of various functions to meet the most enhanced security and locking requirements.

Mortise Lockcase AA5100 Series

Various locking functions for multiple applications

Locking functions

- Passage Latch
- Entrance Lockcase
- Deadlock Lockcase
- Classroom Lockcase
- Privacy Lockcase
- Nightlatch Lockcase
- Roller bolt entrance Lockcase
- Panic exit entrance Lockcase

Dimensions

A	B	C	D	E	F	G
60mm	89mm	72mm	30mm	165mm	38mm	31mm

H	I	J	K	L	M	N
12.5mm	35mm	20mm	235mm	24mm	12mm	9mm

Limiting dimensions

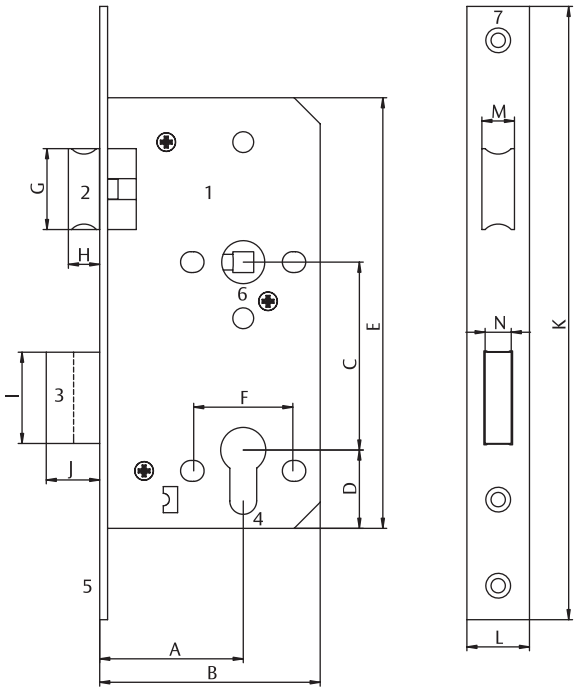

Parts:

1. Lock case
2. Latch bolt
3. Deadbolt
4. Euro cylinder hole
5. Face plate
6. Lever follower
7. Counter sunk holes

Passage Latch

Model No.: ***AA5101***

Outside: Opened by handle at all times
Inside: Opened by handle at all times

Backset	CTC	Finish	Art. No.
55	72	Satin SS	AA5101 5572-F US32D
60			AA5101 6072-F US32D
55		Polish Brass	AA5101 5572-F US3
		Black matt	AA5101 5572-F US19

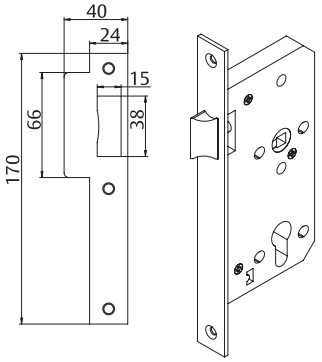

Model No.: ***AA510L***

Outside: Opened by handle at all times
Inside: Opened by handle at all times

Backset	CTC	Finish	Art. No.
55	--	Satin SS	AA510L 55-F US32D
		Polish Brass	AA510L US3
		Black matt	AA510L US19

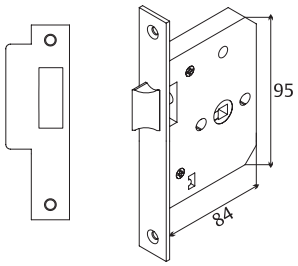

Entrance Lockcase

Model No.: ***AA5103***

Outside: Opened by handle when unlocked.
Lever withdraws latchbolt. Key locks or unlocks bolt, key withdraw latchbolt.
Inside: Opened by handle when unlocked. Lever handle at one side withdraws latchbolt. Key or turn locks to unlock the bolt, latchbolt.

Backset	CTC	Finish	Art. No.
55	72	Satin SS	AA5103 5572-F US32D
60			AA5103 6072-F US32D
55		Polish Brass	AA5103 5572-F US3
		Black matt	AA5103 5572-F US19

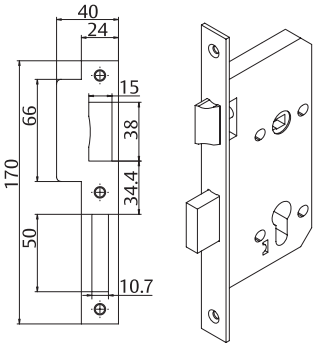

Privacy Lockcase

Model No.: ***AA5109***

Outside: Opened by handle except when bolt is thrown by turn knob from inside. Bolt may be unlocked from outside by coin or screwdriver
Inside: Opened by handle except when bolt is thrown by inside turn knob.

Backset	CTC	Finish	Art. No.
55	72	Satin SS	AA5109 5572-F US32D
60			AA5109 6072-F US32D
55		Polish Brass	AA5109 5572-F US3
		Black matt	AA5109 5572-F US19

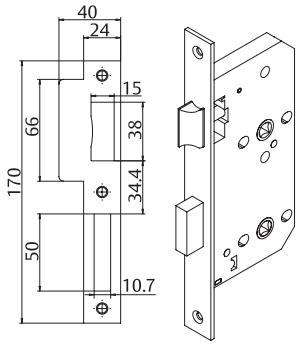

Classroom Lockcase

Model No.: ***AA5105***

Outside: Opened by handle except when handle is made inoperative by key from outside. Key locks or unlocks outside handle.
Inside: Opened by handle at all times.

Backset	CTC	Finish	Art. No.
55	72	Satin SS	AA5105 5572-F US32D
60			AA5105 6072-F US32D

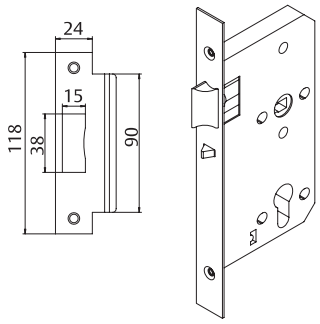

Deadlock Lockcase

Model No.: ***AA5104***

Outside: Bolt is locked or unlocked by key or turn
Inside: Bolt is locked or unlocked by key or turn

Backset	CTC	Finish	Art. No.
55	72	Satin SS	AA5104 5572-F US32D
60			AA5104 6072-F US32D
55		Polish Brass	AA5104 5572-F US3
		Black matt	AA5104 5572-F US19

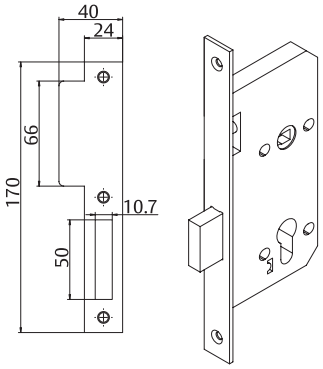

Model No.: ***AA09/55***

Outside: Bolt is locked or unlocked by key or turn
Inside: Bolt is locked or unlocked by key or turn

Backset	CTC	Finish	Art. No.
55	--	Satin SS	AA09/55 US32D
		Polish Brass	AA09/55 US3
		Black matt	AA09/55 US19

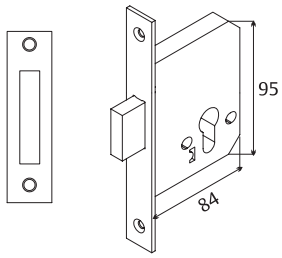

Nightlatch Lockcase

Model No.: ***AA5106***

Outside: Latch is withdrawn by key or turn.
Inside: Latch is withdrawn by key or turn.

Backset	CTC	Finish	Art. No.
55	72	Satin SS	AA5106 5572-F US32D
60			AA5106 6072-F US32D

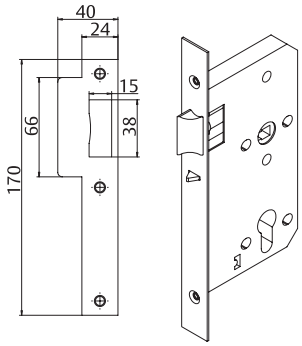

Roller Bolt Entrance Lockcase

Model No.: ***AA510R***

Outside: Bolt is locked or unlocked by key or turn.
Inside: Bolt is locked or unlocked by key or turn.
* Roller bolt can always open the door from inside and outside when door is unlocked, roller bolt is not operated by handle.

Note: Optional double door strike can be provided

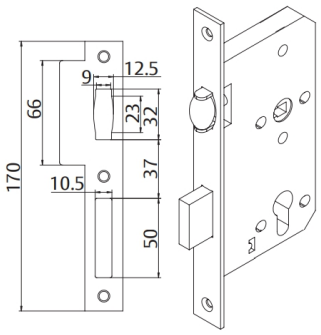

Backset	CTC	Finish	Art. No.
55	72	Satin SS	AA510R 5572-F US32D
60			AA510R 6072-F US32D
55		Polish Brass	AA510R 5572-F US3

Panic exit entrance Lockcase

Model No.: ***AA510P***

Outside: Outside handle is made inoperative by key or turn from inside or key from outside. Key locks or unlocks the outside handle only.
Outside: Opened by handle at all times.

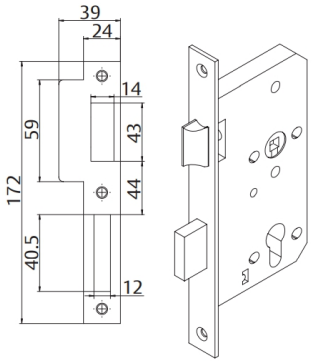

Backset	CTC	Finish	Art. No.
55	72	Satin SS	AA510P 5572-F US32D
60			AA510P 6072-F US32D

Accessories Toilet Indicator

Model No.: ***R53-4/38 US32D***

Note: To be used with privacy mortise lockcase AA5109.

Narrow Profile Mortise Lockcase

ASSA ABLOY

Narrow Profile Mortise Lockcase AA5100 SERIES

Technical details:

- Made of SS 304
- 4 different functions
- 4 Backset options
- Non-handed: latch reversible
- Compliant to BS EN 12209

Benefits:

- High corrosion resistance
- High durability
- Versatile usage

Technical details:

- Center to center: 85mm
- Backset: 20mm, 25mm, 30mm, 35mm
- Door thickness required: 35 to 50mm
  the standard screw fixing pack provided
- Fits standard cam euro profile cylinder
- Double throw projection deadbolt: 20mm
- Suitable for hinged aluminium and metal doors
- All mortise lockcases contain suitable strike plates and screws

The range of ASSA ABLOY mortise lockcases consists of various functions to meet the most enhanced security and locking requirements.

Narrow Profile Mortise Lockcase

ASSA ABLOY

Passage Lockcase

Model No.: ***AA5101 2085, AA5101 2585, AA5101 3085 AA5101 3585***

Description: ASSA ABLOY Narrow profile mortise lockcase
C to C: 85mm

Outside: Opened by handle at all times
Inside: Opened by handle at all times

Backset	Art. No.
20mm	AA5101 2085 US32D
25mm	AA5101 2585 US32D
30mm	AA5101 3085 US32D
35mm	AA5101 3585 US32D

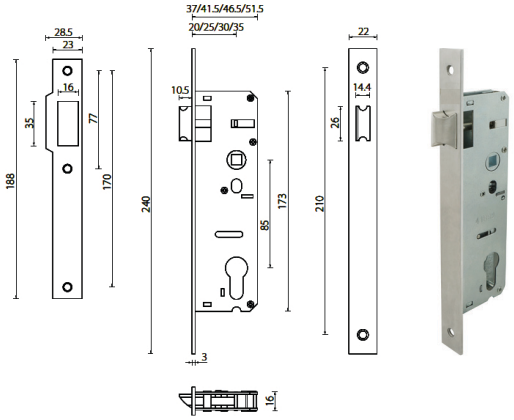

Entrance Lockcase

Model No.: ***AA5103 2085, AA5103 2585, AA5103 3085 AA5103 3585***

Description: ASSA ABLOY Narrow profile mortise lockcase
C to C: 85mm

Outside: Opened by handle when unlocked. Lever withdraws latchbolt. Key locks or unlocks bolt, key withdraws latchbolt.
Inside: Opened by handle when unlocked. Lever handle at one side withdraws latchbolt. Key or turn locks to unlocks the bolt, key or turn locks to withdraw latchbolt.

Backset	Art. No.
20mm	AA5103 2085 US32D
25mm	AA5103 2585 US32D
30mm	AA5103 3585 US32D
35mm	AA5103 3585 US32D

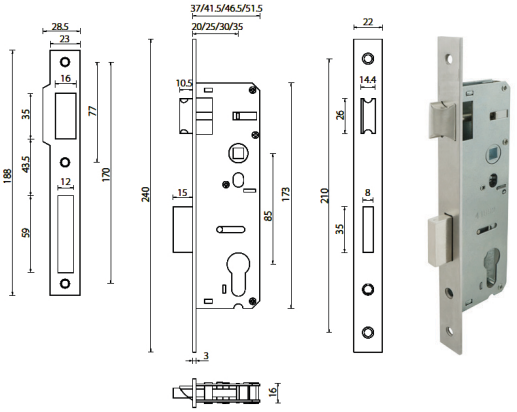

Sliding Door Lock

ASLD-02

Model No.: ***ASLD-02***

Description: ASSA ABLOY Sliding door lockcase with cylinder hole

Dimensions: Backset 55mm

Outside: Operated by Key

Inside: Key or turn

Finish	*Art. No.*
Satin SS	ASLD-02 US32D
Polish Brass	ASLD-02 US3
Black Matt	ASLD-02 US19

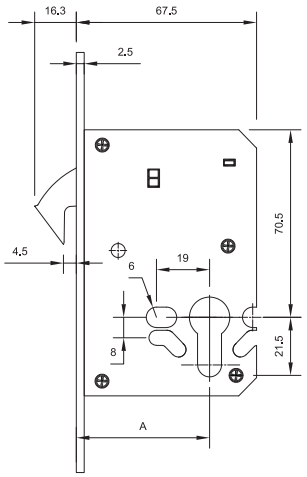

Sliding Door Lock

ASLD-03

Model No.: ***ASLD-02***

Description: ASSA ABLOY Sliding door lockcase with spindle hole

Dimensions: Backset 50mm

Finish	*Art. No.*
Satin SS	ASLD-03 US32D
Polish Brass	ASLD-03 US3
Black Matt	ASLD-03 US19

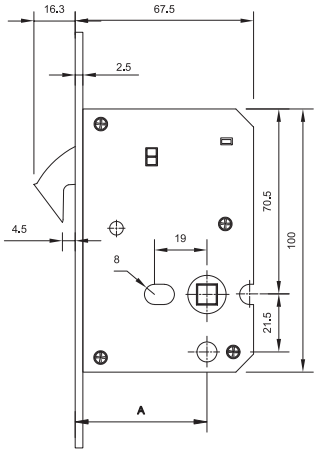

Everything you need:
for projects doors, fire doors, special doors, multi-functional doors

In the commercial and public building sector, there are a large number of different doors with different functions, depending on building use.

Office buildings, hotels, hospitals and industral buildings have entrance areas, patient rooms, conference rooms, security areas and other special facilities. OneSystem and all components in this unique project lock range meet requirements for doors as a system.

Requirements for doors in commercial and public buildings:

- Fire and smoke protection
- Escape routes and emergency exit functions
- Access control and integration
- Burglary prevention and protection against tampering
- Door automation and barrier-free design
- Monitoring and communication
- Material and design
- Cost efficiency and environmental responsibility

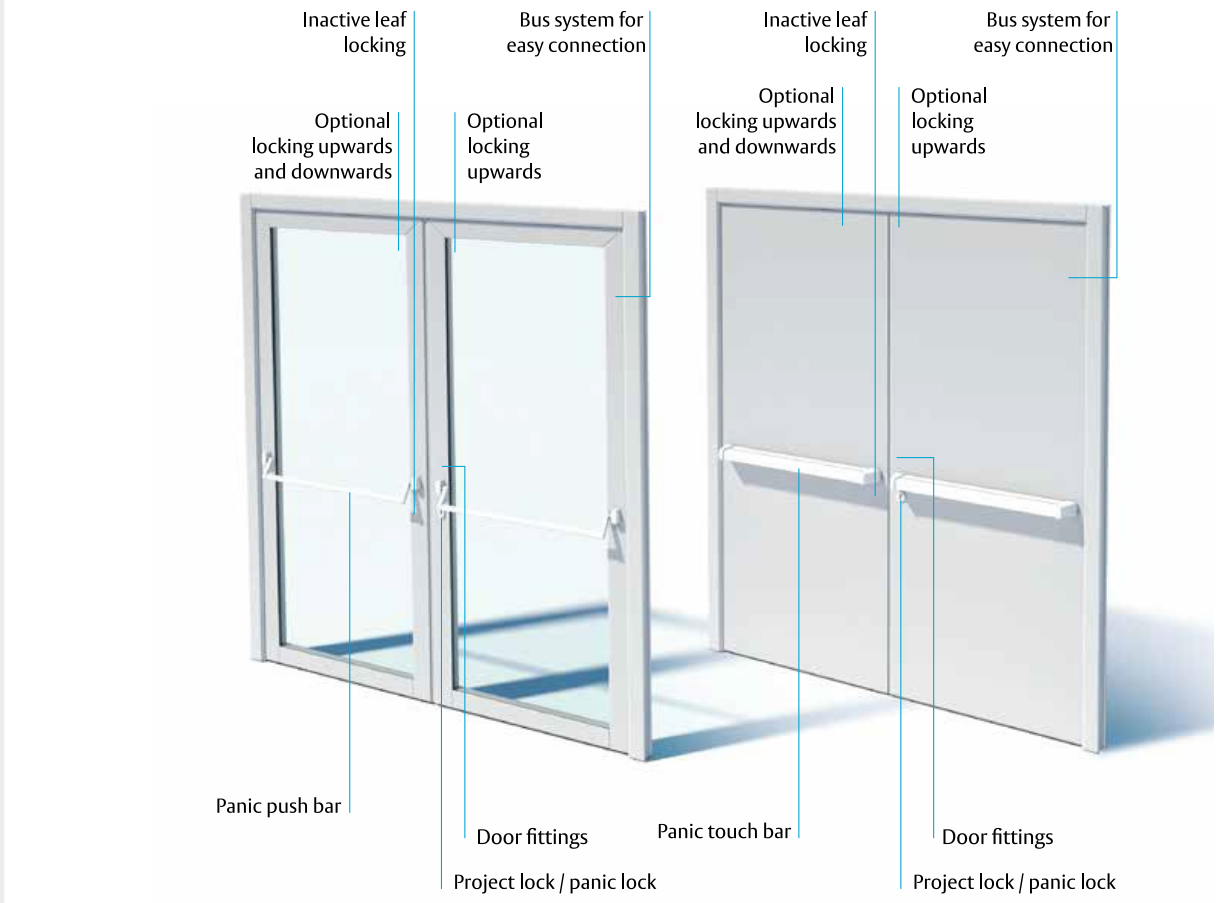

OneSystem project locks:

different series, customer-oriented variants, precisely in line with your requirements

OneSystem provides you with a modular product system featuring a total of 14 project lock model ranges with countless variants.

All project locks and components feature the necessary functions to be integrated into virtually any door and virtually any door system: into standard project doors, fire doors, special doors and multifunctional doors. The locks can be arbitrarily replaced within OneSystem in order to change functions. All project locks and components will have the legally required approvals and certificates for the EU and further afield.

Requirements or doors in commercial and public buildings:

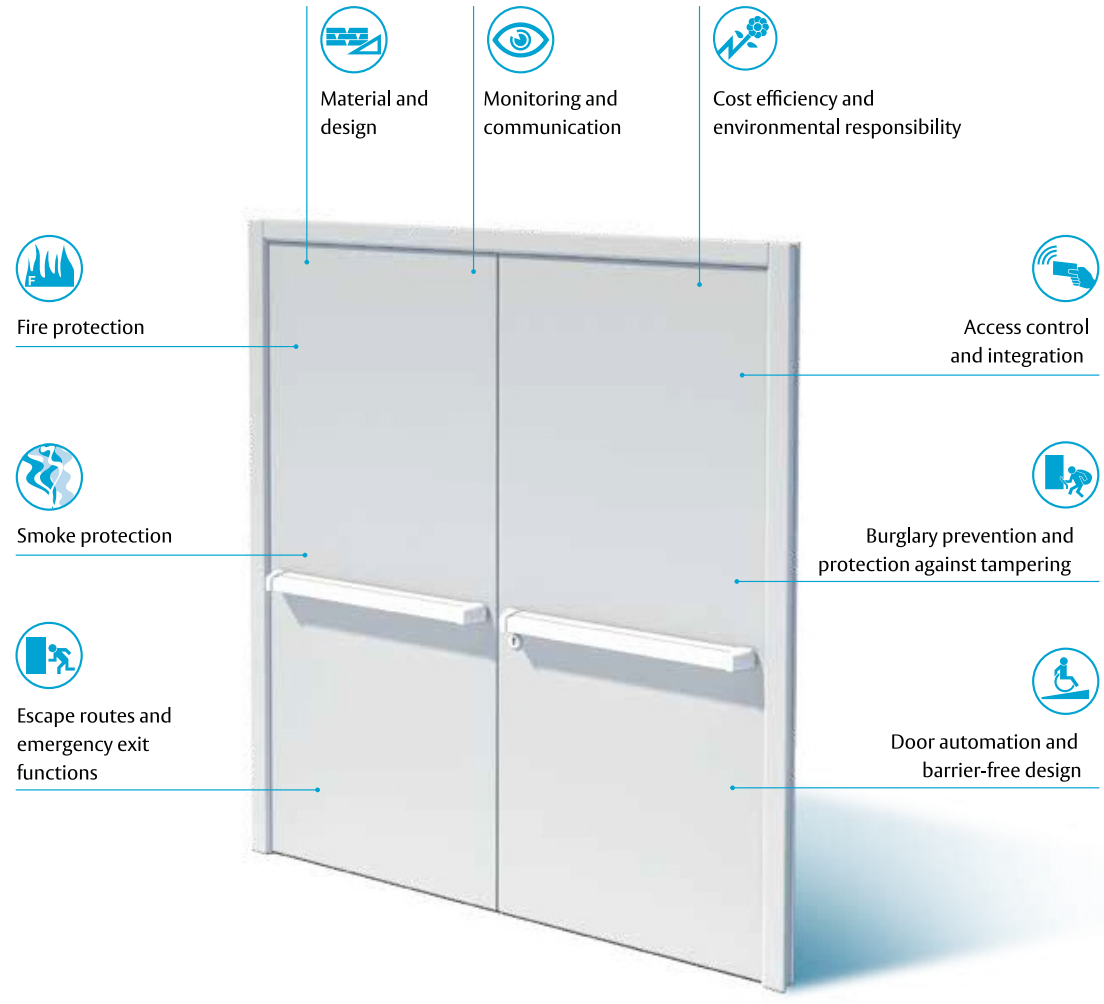

Standard Project Lock Wide Style

Always fits wherever you install it

This multi-talented project lock impresses with its versatility with regard to function, security and reliability. As a wide style version, suitable for single-leaf doors and for double-leaf doors in combination with a unique espagnolette in the passive leaf. The new feature is that the espagnolette is integrated in the strike plate. Bathroom lock or latch lock and deadbolt lock versions are also available for optimal usage flexibility.

Standard project lock, wide stile - the benefits:

- Environmental product declaration (EPD) in accordance with EN 15804
- Tested for 1,000,000 cycles and 300 kg door weight
- Compliance with EN 12209
- Small rear backset 17 mm
- Continuous screw connection of escutcheons
- Suitable espagnolette integrated in the strikeplate
- 20 mm bolt throw with a single rotation
- Also available as a fire protection version
- Closed lock case
- Latch DIN left/right reversible without tools
- Security escutcheons and round rosettes can be screwed on through the lock
- Stainless steel faceplate
- Deadbolt with anti-tampering design
- Developed for Euro profile cylinder and Swiss round Profile cylinder

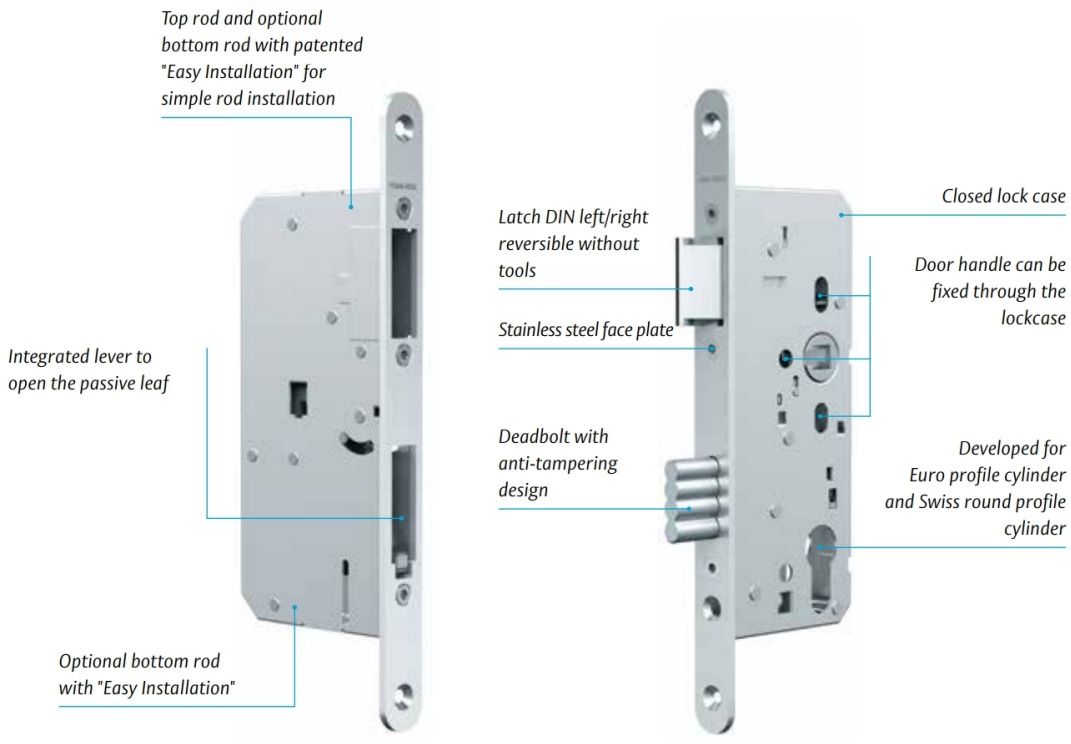

Standard Panic Lock Narrow Style

More functions for more flexibility

The standard panic lock in the narrow version can be used for both single-leaf and double-leaf doors. For single-leaf panic doors with occasional leaf, the OneSystem espagnolette can be used. All panic locks from the OneSystem product portfolio are versatile and can be equipped with suitable monitoring functions depending on the requirements. The panic functions B, C, D and offer a wide range of usage possibilities. In combination with the OneSystem panic bars type A and type B, they fulfil the requirements in accordance with EN 1125. The requirements in accordance with EN 179 are fulfilled in combination with various handle-versions.

Standard project lock, wide stile - the benefits:

- Environmental product declaration (EPD) in accordance with EN 15804
- Tested for 200,000 cycles and 300 kg door weight
- Compliance with EN 179/EN 1125, EN 12209 and suitable for installation in fire doors.
- Small rear backset 15 mm
- Panic function inwards/outwards switchable
- Optional: Bus system with integrated monitoring sensors and simplified connection via 5-wire cable
- Closed lock case
- Latch, reversible between DIN left and right in new design for greater strength and with integrated noise reduction
- Security escutcheons and round rosettes can be screwed on through the lock
- Deadbolt with anti-tampering design
- Optional: Bus System with integrated monitoring function
- Developed for Euro profile cylinder and Swiss round Profile cylinder

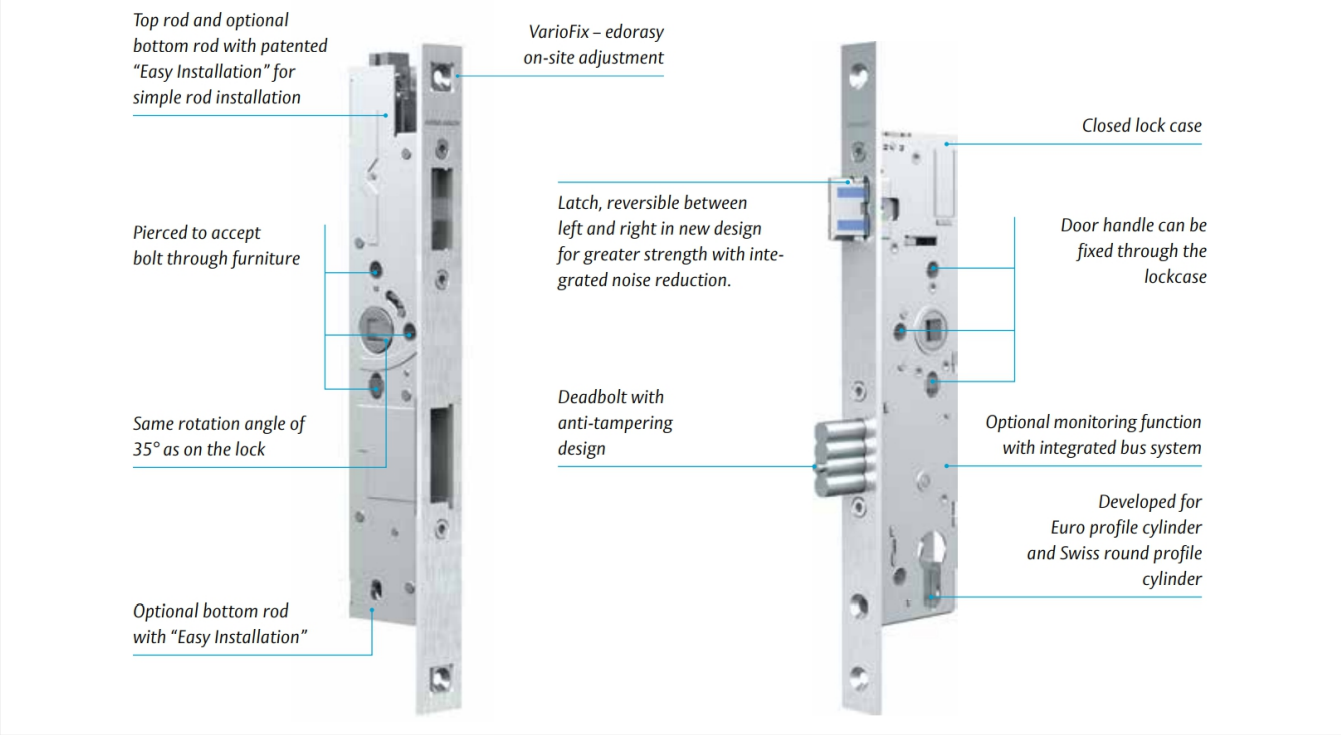

Self-locking multi-point locks with handle control (SBP) narrow style

Combine security, safety, flexibility and comfort

The handle-controlled SBP multi-point locks with self blocking latch bolt with 20 mm throw and are suitable for both single-leaf and double-leaf doors. The auxillery lock cases have either a standard bolt or hook bolt together with a flip latch and lock togetherwith the latch bolt in the main lock case.

With the handle control the locks are released electronically, via access control, for example. The outside handle is engaged or disengaged depending on the setting (fail-locked/fail-unlocked). The monitoring function is integrated. The simplified connection via a 5-wire cable means that the lock can be connected to different ASSA ABLOY products with Hi-O Standard.

The handle-controlled SBP multi-point lock is combined with corresponding escutcheons or EPD's in accordance with EN179 and EN 1125 (see approval certificates). For double-leaf full panic doors, the panic passive leaf lock N1930 is used. For use on single-leaf panic doors with inactive leaf, the espagnolette N1910 can be used. Faceplate extensions (4th bolt) for extra-high doors are available in different lengths.

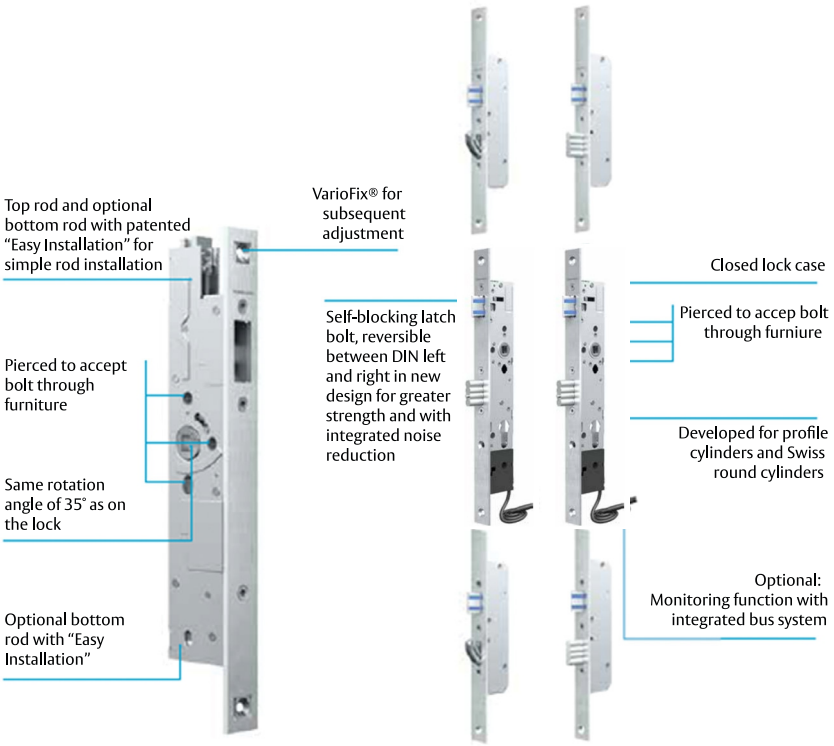

Self-locking multi-point locks, narrow style - the benefits:

- Environmental product declaration (EPD) in accordance with EN 15804
- Compliance with EN 179/EN 1125, EN 14846 and suitable for installation in fire doors
- Small rear backset 15 mm
- Fail-locked/fail-unlocked operation
- Panic function inwards/outwards switchable
- Bus system for handle operation and for querying the integrated monitoring sensors (simplified connection via 5-wire cable)
- Security escutcheons and round rosettes can be screwed on through the lock
- Rotation angle of 35°
- Self-blocking latch bolt and flip latches in the additional case, reversible between DIN left and right in new design for greater strength and with integrated noise reduction .
- Closed lock case
- Developed for Euro profile cylinder and Swiss round profile cylinder
- 4th bolt can be added

Accessories

The right security product – guaranteed

Panic push bar, metal frame door version

The comprehensive and optimally adjusted OneSystem accessory range offers suitable solutions for almost all applications

These include:

- IO modules in various variants for monitoring and controlling
- Hi-O-capable locks as well as connection to conventional devices
- Extension of the locking system in the case of extra door elements
- Components for locking the inactive leaf
- Suitable strike plates e.g with integrated escape door strike
- Connection options for electrifying the door

Features and Benefits

AA8700Series

Features:

- Made of 304 stainless steel
- 1,000,000 cycles tested
- 19 latching functions
- Fire rated UL 10C
- Non-handed - latch reversible
- ANSI/BHMA A156.13 Grade 1
- Door thickness: range 45-55 mm with the standard screw fixing pack provided
- 70mm backset

Benefits:

- High corrosion resistance
- High durability
- Versatile usage
- Can be used for fire doors
- Provide maximum security performance
- Application in commercial buildings, schools and other institutions

Standard & Certification

ANSI/BHMA 156.13 Operational Grade1

UL10C

BHMA Listed

Technical details:

- Center to center - 92mm
- Bevel front - free-floating to adjust from flat to the standard bevel of 3mm in 51mm
- 25mm (1") deadbolt projection
- Latchbolt - 19mm, stainless steel two-piece anti-friction reversible latchbolt camming action
- Case - Heavy Guage wrought steel, Zinc dichromated
- Handing - Reversible at site
- Trim Alignment - Expansion anchor spindle fixing method ensures top security and tightening
- Suitable for hinged timber, metal and fire doors
- All mortise lock contain ANSI strike plate and screws

Finishes

- 630 Satin Stainless Steel
- 724 PVD Bright Brass

Consult local ASSA ABLOY sales representative when other finish is required

Application

- Suitable for hinged timber, metal and fire doors where applicable
- Favorable for various application in commercial building, industrial plant, school, hospital, airport, gymnasium, shopping mall and most public building

Section

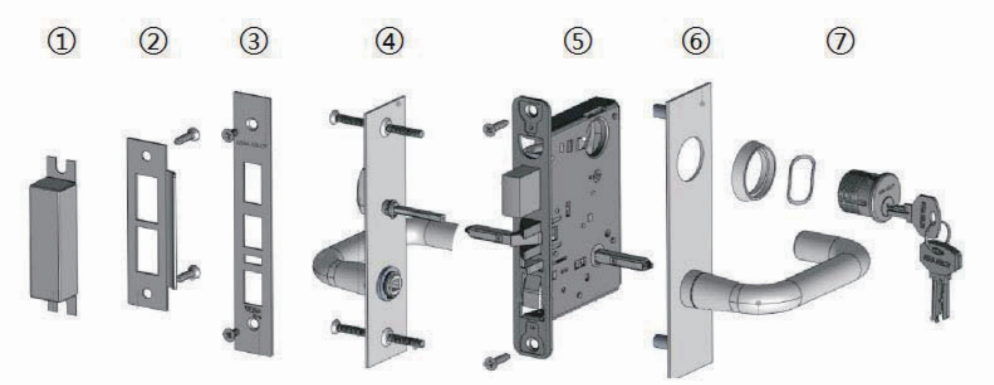

①	Wrought strike box	④&⑥	Trim
②	ANSI Template Strike Plate	⑤	Lock Body
③	Armor Front	⑦	Cylinder

Structure

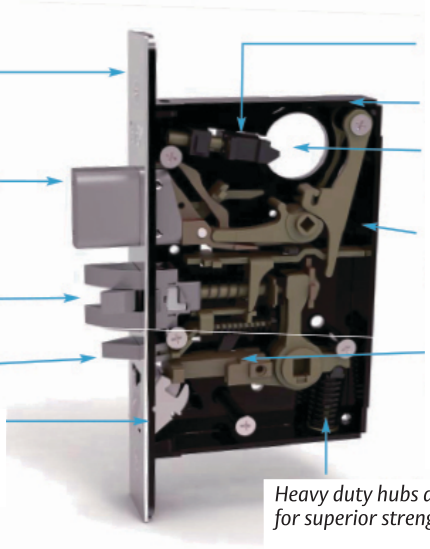

1.5mm thick stainless steel outside front plate. Adjustable for door bevels from flat to 3mm in 51mm.

25.5mm throw, slim oval shape stainless steel 304 made dead bolt.

19mm projection stainless steel two-piece latch, reversible at site. Anti-friction piece for quiet operation and prevents scratching of strike plate.

Non-handed stainless steel deadlatch.

Inside front 3mm steel (full length). One-piece design to hold lock securely in door.

Cylinder retainer two prong grip Security Grade 1

Extra strong 3mm steel case for improved impact resistance.

6-pin solid brass cylinder standard; master keying systems available.

Heavy gauge corrosion resistant parts provide security, reliability, durability and longevity.

Heavy gauge corrosion resistant parts provide security, reliability, durability and longevity.

Heavy duty hubs and spring cartidge for superior strength and cycle life.

Lock Dimension

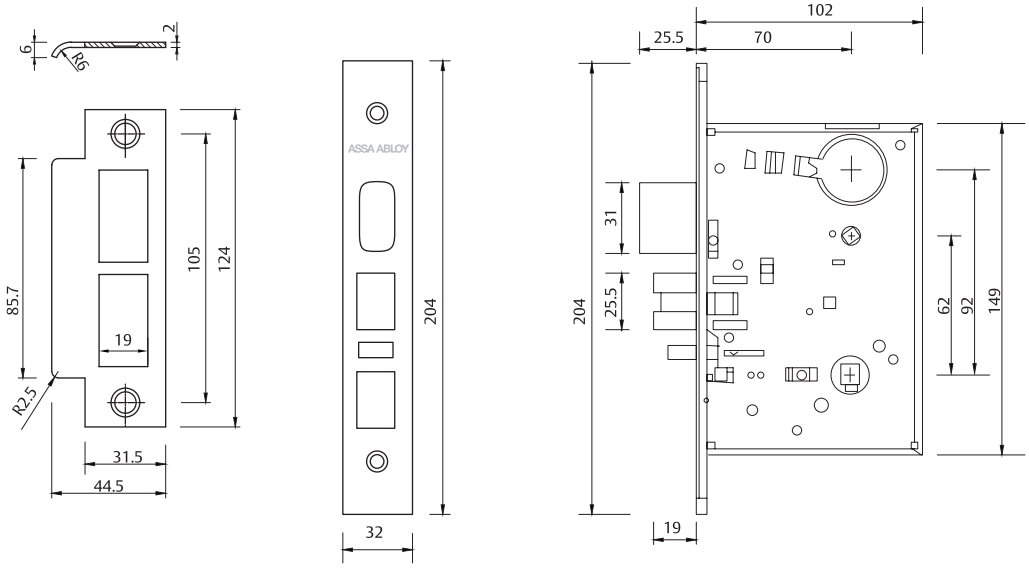

ANSI Mortise Lockcase

ASSA ABLOY

Function No.	Model No.	Description	Outside	Inside
F01 Passage or Closet	AA8701	• Latchbolt retracted by lever either side at all times • Both levers alway free	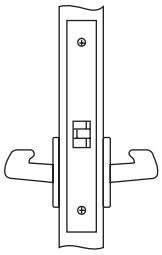	
F05 Classroom	AA8705	• Latchbolt retracted by lever either side, unless outside lever is locked by key outside • Auxiliary latch deadbolts latch bolt • Inside lever always free	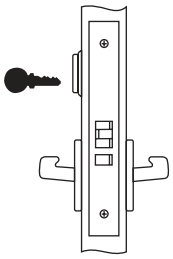	
F07 Storeroom or Closet	AA8707	• For use on storeroom, utility, exit doors • Latchbolt retracted by key outside, knob/lever inside • Outside lever rigid at all time • Inside lever always active • Deadlocking latchbolt	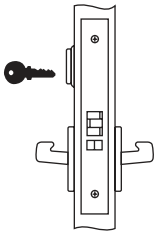	
F09 Entrance or Public Restroom	AA8709	• Latchbolt retracted by lever either side, unless outside lever by key inside. • When outside lever is locked, latchbolt is operated by key outside and lever inside • Auxiliary latch deadlocks latchbolt • Inside lever always active	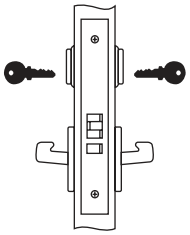	
F10 Apartment Corridor Door Lock	AA8710	• Key and thumbturn both retract & project deadbolt • Trim outside is locked by toggle or projecting deadbolt • Key retracts both latchbolt and deadbolt, trim outside remains locked • Trim outside retracts latchbolt only, deadbolt is retracted manually & trim outside remains locked	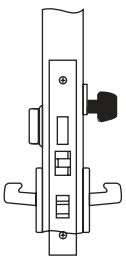	

ANSI Mortise Lockcase

ASSA ABLOY

Function No.	Model No.	Description	Outside	Inside
F13 *Dormitory, Entrance or Storeroom*	AA8713	• Latchbolt retracted by lever either side. • Deadbolt operated by key outside, or by thumbturn inside. • When the deadbolt is projected, outside lever is automatically locked. • Inside levers imultaneously retracts latchbolt and deadbolt, automatically unlock outside lever.	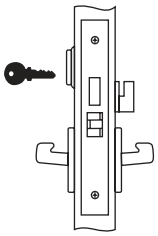	
F14 *Storeroom or Closet*	AA8714	• Latchbolt retracted by lever either side. • Deadbolt operated by key both sides.	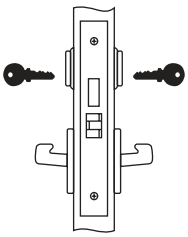	
F16 *Dead lock Double cylinders*	AA8716	• Deadbolt operated by key both sides. • Not UL listed. **Notes:** Use only on room, with more than 1 exit.	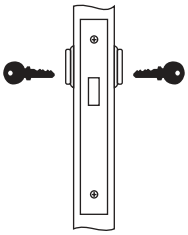	
F17 *Deadlock Cylinder and turn*	AA8717	• Deadbolt by key outside or by thumbturn inside. • Not UL listed.	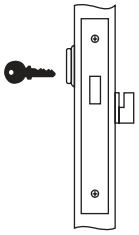	
F18 **Deadlock Single side cylinder**	AA8718	• Deadbolt operated by key outside only. • No inside operation. • Not UL listed.		

ANSI Mortise Lockcase

ASSA ABLOY

Function No.	Model No.	Description	Outside	Inside
F19 *Privacy, Bedroom or Bathroom*	AA8719	• Latchbolt retracted by lever either side. • Deadbolt operated by thumbturn inside, or by emergency release tool outside. • When the deadbolt is projected, outside lever is automatically locked. • Inside levers imultaneously retracts latchbolt and deadbolt, automatically unlock outside lever.	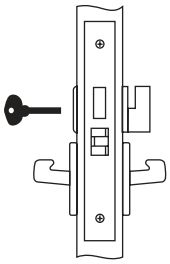	
F20 *Apartment or Dormitory*	AA8720	• Latchbolt retracted by lever either side, unless outside lever is locked by toggle-action stop or by projection of deadbolt. • Deadbolt operated by key outside or by thumbturn inside. • When outside lever is locked, latchbolt and deadbolt are operated by key outside. • When the deadbolt is projected, outside lever is automatically locked. • Inside lever simultaneously retracts latchbolt and deadbolt with outside lever remains locked. • Auxiliary latch deadlocks latchbolt.	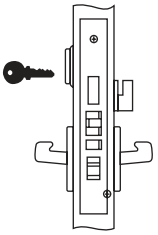	
F21 *Storeroom or Closet*	AA8721	• Latchbolt retracted by knob/lever either side. • Deadbolt operated by key outside, or by thumbturn inside.	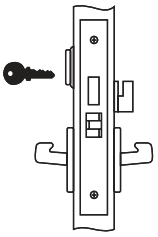	
F29 **Classroom Deadlock**	AA8720	• Deadbolt operated by key outside, or by thumbturn inside. • Thumbturn inside will retract the deadbolt but will not project it. • Not UL Listed.	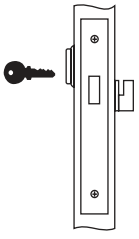	

How to order : AA8700 Series

Example: ***AA8701-H01-CY32 E1-630***

Model. No.		Lever Design		Cylinder Length		Finish	
AA8701 AA8705 AA8707 AA8709** AA8710 AA8713 AA8714 AA8716 AA8717 AA8718 AA8719 AA8720 AA8721 AA8729	-	H01 H02 H03 H04 H05 K01	-	CY32E1 (1/4" - 32mm)* CY32EC1 (1/4" - 32mm)**	-	630 724	Satin Stainless Steel PVD Bright Brass

* *Cylinder CY32E - length 32mm for door thick 40-54mm, consult factory for suitable cylinder length to specific door thick*

** *CY32EC are double cylinders for AA8709 only*

Strike and Strike Box

- 6mm curved lip
- 32mm lip length as standard for 40-54mm door thickness, please consult factory for suitable strike length to specific door thickness
- Strike materials 304 stainless steel
- Strike box mateials galvanized steel

Cylinder

- 6-pin high security ANSI cylinder with nickel silver brass key
- Option master key system up to GGMK
- 32mm (1-1/4") length as standard for 40-54mm door thickness
- Option cylinder length are 30mm (1-1/8"), 35mm (1-3/8"), 38mm (1-1/2"), 45mm (1-3/4"), 51mm (2"), 57mm (2-1/4") for difference door thickness
- Consult factory for suitable cylinder length to specific door thickness

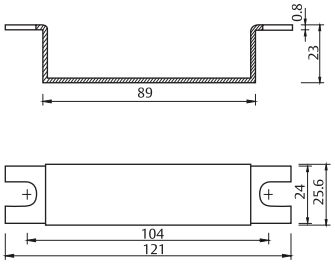

All dimensions are in mm

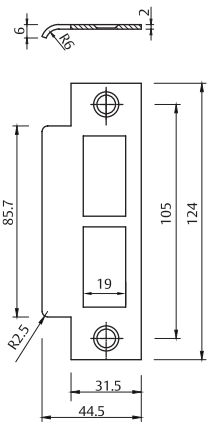

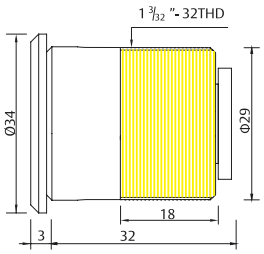

ANSI Mortise Lockcase

ASSA ABLOY

Electrified mortise AA8700 Series

Features:

- Mechanical key override
- Available in 12 volts DC (option 24 volts DC)
- External rectifier for AC operation
- Available Fail Safe or Fail Secure
- LBM, DBM and REX available
- Continuous duty solenoid
- 480mA@12VAC/DC (standard)
- 240mA@24VAC/DC (option)

Benefits:

- Provide the ability to electrically lock or unlock the outside trim from a remote location
- Fail Safe locks - commonly used in stair towers to release upon fire alarm activation
- Fail Secure locks - used on perimeter doors or security doors to allow ingress using access contrd technologies

Standard & Certification

ANSI/BHMA 156.13
Operational Grade 1

Technical details:

Fail Safe

- Power on locks outside/inside lever
- Deadlocking latchbolt
- Latchbolt retracted by mechanical key when locked electrically

Fail Secure

- Power on locks outside/inside lever
- Deadlocking latchbolt
- Latchbolt retracted by mechanical key when power is off

AA8792(FailSafe)
AA8791(FailSecure)

AA8792(FailSafe)
AA8793(FailSecure)

Monitoring

Option:

- REX(Request to Exit)- An SPDT switch that monitors activation of the free lever (not available with knob trim). REX is available for all mechanical and electrified functions and can be supplied alone or with either LBM or DBM.
- LBM (Latchbolt Monitor) - An SPDT switch that monitors full retraction of the main latch. LBM is available for all mechanical and electrified functions without a deadboltand can be supplied alone or with REX.
- DBM (Deadbolt Monitor)- An SPDT switch that monitors full extension orretraction of the deadbolt. DBM is available for all mechanical and electrified functions with a deadbolt and can be supplied alone with REX. DBX cannot be used with LBM together.
- CYS (Cylinder Monitor) - An SPDT switch that monitor the movement of cylinder cam.

Electric option

LBM – Latch Bolt Monitor
DBM – Dead Bolt Monitor
REM – Request for Exit

DPS – Auxiliary Latch Monitor
CYS – Cylinder Monitor

ANSI Mortise Lockcase

ASSA ABLOY

Function No.	Model No.	Description	Outside / Inside
90 *Latch*	AA8790	• Power off - outside lever active • Power on - outside lever locked • Auxiliary latch deadlocks latchbolt • Inside lever always free • Mechanical key override by outside when locked	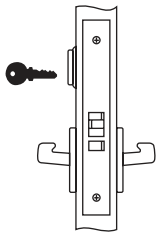
91 *Latch*	AA8791	• Power off - outside lever locked • Power on - outside lever active • Auxiliary latch deadlocks latchbolt • Inside lever always free • Mechanical key override by outside when locked	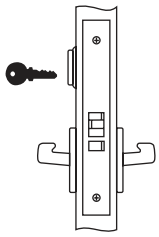
92 *Latch & Deadbolt*	AA8792	• Power off - outside lever active • Power on - outside lever locked • Auxiliary latch deadlocks latchbolt • Inside lever always free • Mechanical key override by outside when locked	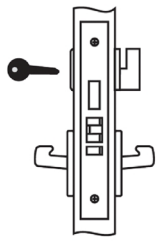
93 *Latch & Deadbolt*	AA8793	• Power off - outside lever locked • Power on - outside lever active • Auxiliary latch deadlocks latchbolt • Inside lever always free • Mechanical key override by outside when locked	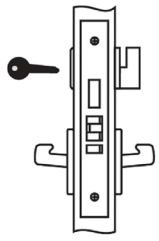
90-D *Dual Solenoid*	AA8790-D	• Outside: Fail Lock Power on – Unlock Power off – Lock • Inside: Fail safe Power on – lock Power off – unlock • Mechanical Key retract latch • CYS, cylinder monitor shows key is being used to open the lock • Card Control at either side can be changed at field	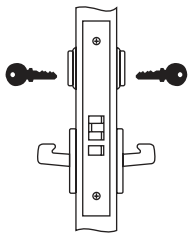 HIP

* *DBM is only for AA8792 and AA8793 Model No. Description Outside Inside*

** *Cylinder CY32E of length 32mm for door thickness 40-54mm, consult factory for suitable cylinder length to specific door thickness*

H01

Model No.: H01
Material: 304 Stainless Steel
Construction: Hollow
Finish: 630 Stain Stainless Steel

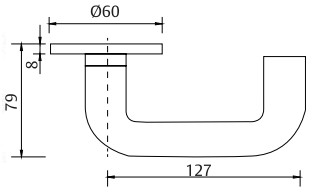

H02

Model No.: H02
Material: 304 Stainless Steel
Construction: Solid
Finish: 630 Stain Stainless Steel

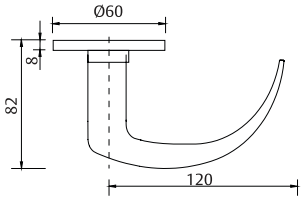

H03

Model No.: H03
Material: 304 Stainless Steel
Construction: Solid
Finish: 630 Stain Stainless Steel

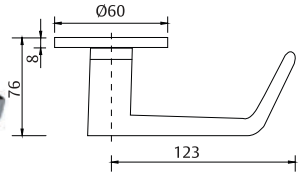

H04

Model No.: H04
Material: 304 Stainless Steel
Construction: Hollow
Finish: 630 Stain Stainless Steel

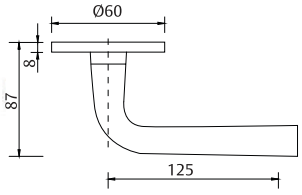

H05

Model No.: H05
Material: 304 Stainless Steel
Construction: Hollow
Finish: 630 Stain Stainless Steel

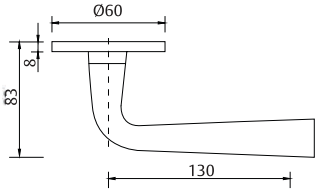

Euro Profile Cylinders

ASSA ABLOY

Experience a safer and more open world

Features and Benefits

Euro Profile Cylinder

Features:

- 6 pins, Yale Keyway
- Can be keyed to 4 level grand master key system
- Construction master keying is not recommended
- Available lengths: 45mm, 60mm, 70mm, 80mm, 90mm, 100mm
- Dimple Keying available as option (cannot be master keyed)
- C4 and Yale keyway are available, specify keyway required when ordering

Benefits:

- Versatile usage
- Key control
- Suitable for various thickness of doors

Technical details:

- Satin Nickel and Satin Brass finish available
- Suitable door thickness up to 120mm
- Each euro profile cylinder supplied with 3 keys
- Cylinders available in:
    1. Cylinder and turn
    2. Double cylinder
    3. Single cylinder
    4. Privacy cylinder

ASSA ABLOY range of euro profile fixed cam cylinder is suitable to be used with euro profile mortise lockcases

Grand Master Key System

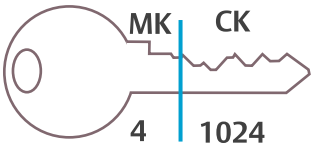

One cut allows for 4 theoretical masters under the grand. The remaining five cuts allow for 4 X 4 X 4 X 4 X 4 X 4 = 1,024 change keys under each master.

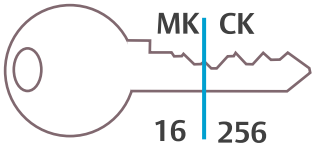

Two cuts give 4 X 4 = 16 theoretical masters under the grand. The remaining four cuts give 4 x 4 x 4 x 4 = 256 theoretical change keys under each master.

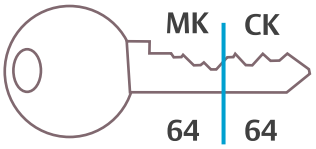

Three cuts give 4 X 4 X 4 = 64 keys at each level.

Great Grand Master Key System

For a great grand master key system (4 levels of keying) keys will be likely divided into three piece. As we saw above, the top master is not progressed, only have to work for the three levels below the great grand. Again, there are only three possible way to divide the key, the location of the chambers devoted to each level will vary from one system to another. The examples illustrated use only one keyway. Most great grand master key systems use additional keyways in a multiple key system.

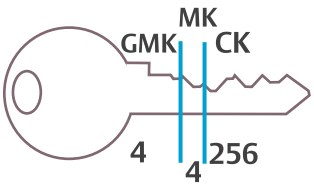

One chamber give 4 grand under the GGMK. One chamber gives 4 masters under each grand. The remaining four chambers give 4 X 4 X 4 X 4 = 256 theoretical changes under each master.

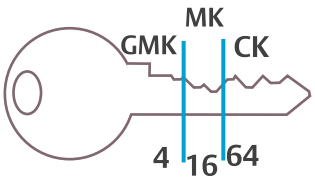

One chamber gives 4 theoretical grands under the GGMK. Two chamber gives 4 X 4 = 16 theoretical masters under each grand. The remaining three chambers give 4 X 4 X 4 = 64 theoretical changes under each master.

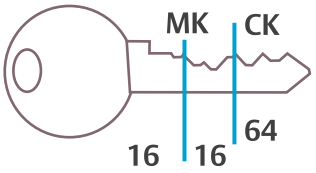

Two chamber used for each level give 4 X 4 = 16 theoretical combinations at each level.

The dividing lines between the cuts of the keys shown above should be considered as brick walls built to separate the levels of keying. These walls are built at the beginning of each keying system and are not movable. For instance, a 3-level system was not laid out as shown in the second illustration and use up all 16 master keys, it cannot dip into the third chamber to obtain a 17th master key. This would create key interchange. A multiplex key system with additional keyways available to get the new master key.
Specify system expansion expected with the most accurate guess at the outset new keying system in order for new combinations to be available when it is needed.

Master Keying
Level of Control

Simple Master Key System (2 Level of Keying)

The master key symbol consists of TWO letters, such as AA. The change key numbers are added to the master key letters. The numbers come FIRST: 1AA, 2AA, 3AA, etc.

When locks are required which are not operated by the master key or other change keys in the system, they are referred to as "single keyed" and given symbols SKD1, SKD2, etc. When all higher levels of master keys are to be disallowed, suffix (NMK) to the symbol of the key which is to operate. This means "not master keyed." Cylinder 1AA (NMK) is operated by 1AA only. The AA master is blocked from operation.

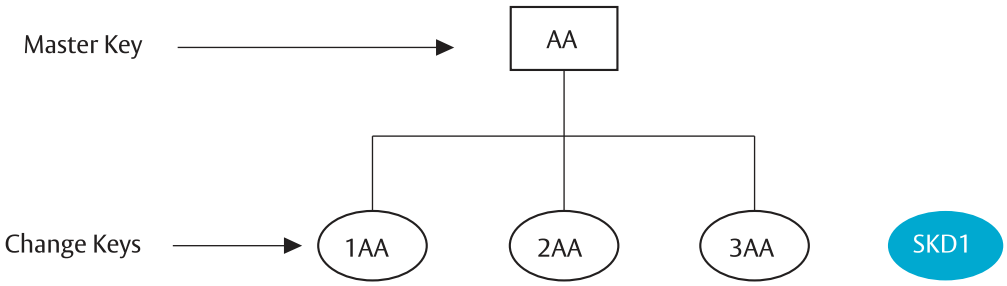

Grand Master Key System (3 Levels of Keying)

The grand master is assigned any ONE letter, such as A. The master keys under this grand are assigned TWO letters, the first of which must be the same as the grand: AA, AB, AC, etc. are all masters under grand A.
Caution: Do not use the letters I, O or Q because of possible confusion with the numerals 1 and 0, respectively. Also do not use the letter X due to confusion with cross keying. Change key numbers come after the letters. For master keys beyond AZ, insert a numeral between the letters to designate which pass through the alphabet they represent. A2A through A2Z represents the second pass of masters under grand A. A3A through A3Z would be the third. Change keys under these masters have the numbers suffixed in the usual way: A2A1, A2A50, etc.

If the cylinder is to be operated by its change key and nothing lower than the single lettered GMK, the change number is added to the GMK symbol. This is illustrated by the example A1 in the schematic shown. When locks are required which are not operated by ANY master keys or other change keys in the system, they are referred to as "single keyed" and given symbols SKD1, SKD2, etc.

When all higher levels of master keys are to be disallowed, suffix (NMK) to the symbol of the key which is to operate. This means "not master keyed" and can be applied to any level in the system. Cylinder AA1 (NMK) is operated by AA1 only. The AA master and A grand are blocked from operation. Cylinder AA (NMK) would be operated by the AA master only. Grand A does not operate.

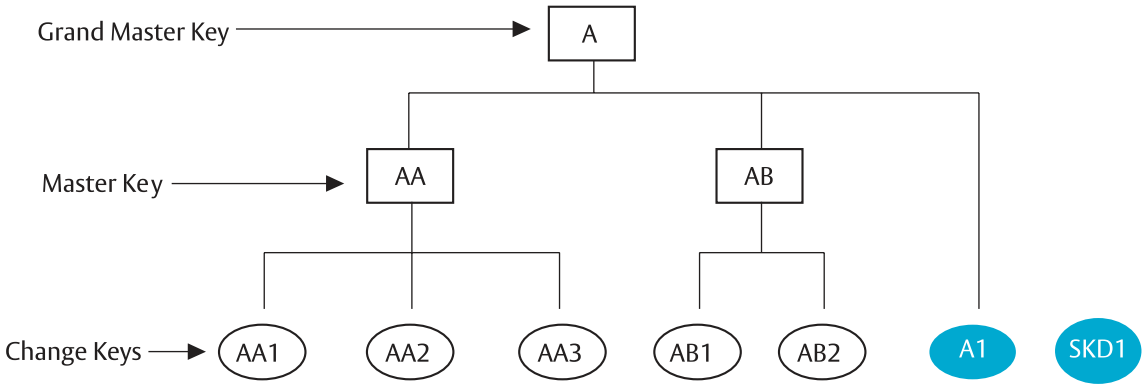

Master Keying

Level of Control

Great Grand Master Key System (4 Levels of Keying)

The great grand master key is assigned the symbol GGM. The rest of the symbols are the same as those in 3-level systems:
The GMKs are assigned single letters, e.g., A, B, C, D, etc. Caution: Never use X for a grand master key due to confusion.

Masters under each GMK are assigned two letters, the first of which is the same as its respective grand master key. Change key numbers come after the letters. Changes under the grand (A1, B1, etc.) and masters beyond AZ are handled exactly as in the 3-lever system already described.

Changes directly under a grand are also handled as illustrated in the 3-level system. For changes directly under the GGM with no intermediate level masters, the change number is added directly to GGM as shown by the example GGM1 in the schematic.

When locks are required which are not operated by ANY master keys or other change keys in the system, they are referred to as "single keyed" and given symbols SKD1, SKD2, ETC.

When all higher levels of master keys are to be disallowed, suffix (NMK) to the symbol of the key which is to operate. This means "not master keyed" and can be applied to any level in the system. Cylinder AA1 (NMK) is operated by AA1 only. The AA master, A grand and GGM are all blocked from operation. Cylinder AA (NMK) is operated by AA master only. Grand A and the GGM do not operate. Cylinder A (NMK) would be operated by the A grand only, without the GGM.

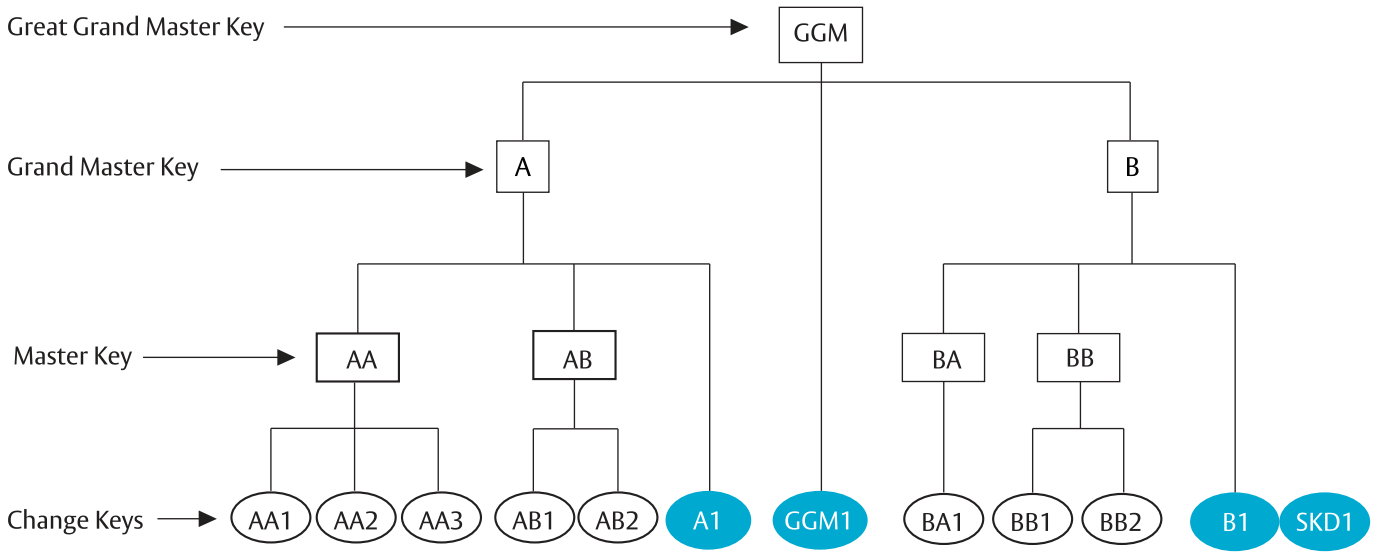

Euro Profile Cylinder

Cylinder with thumbturn

Description: **Cylinder with thumbturn**
Fixed cam, 6 pin. Master keying optional (Simple Master key)
C4 and Yale keyway are available, specify keyway required when ordering

Cylinder length		Finish	Art. No.
A	B		
30	30	Satin Nickel	AACT30/30SNKD US15
		Polish Brass	AACT30/30 US3
		Black Matt	AACT30/30 US19
32	32	Satin Nickel	AACT32/32SNKD US15
		Polish Brass	AACT32/32 US3
		Black Matt	AACT32/32 US19
35	35	Satin Nickel	AACT35/35SNKD US15
		Polish Brass	AACT35/35 US3
		Black Matt	AACT35/35 US19
40	40	Satin Nickel	AACT40/40SNKD US15
		Polish Brass	AACT40/40 US3
		Black Matt	AACT40/40 US19

Euro Profile Cylinder

Double cylinder

Description: **Double Cylinder**
Fixed cam, 6 pin. Master keying optional (Simple Master key)
C4 and Yale keyway are available, specify keyway required when ordering

Cylinder length		Finish	Art. No.
A	B		
30	30	Satin Nickel	AADC30/30SNKD US15
		Polish Brass	AADC30/30 US3
		Black Matt	AADC30/30 US19
32	32	Satin Nickel	AADC32/32SNKD US15
		Polish Brass	AADC32/32 US3
		Black Matt	AADC32/32 US19
35	35	Satin Nickel	AADC35/35SNKD US15
		Polish Brass	AADC35/35 US3
		Black Matt	AADC35/35 US19
40	40	Satin Nickel	AADC40/40SNKD US15
		Polish Brass	AADC40/40 US3
		Black Matt	AADC40/40 US19
45	45	Satin Nickel	AADC40/40SNKD US15
		Polish Brass	AADC40/40 US3
		Black Matt	AADC40/40 US19

Euro Profile Cylinder
Half cylinder

Description: **Single Cylinder**

Fixed cam, 6 pin. Master keying optional (Simple Master key)
C4 and Yale keyway are available, specify keyway required when ordering

Cylinder length A	Cylinder length B	Finish	Art. No.
10	30	Satin Nickel	AAC/40 US15
		Polish Brass	AAC/40 US3
		Black Matt	AAC/40 US19
10	35	Satin Nickel	AAC/45 US15
		Polish Brass	AAC/45 US3
		Black Matt	AAC/45 US19

Euro Profile Cylinder
Privacy cylinder

Description: **Privacy Cylinder**

Cylinder length A	Cylinder length B	Finish	Art. No.
30	30	Satin Nickel	AABT30/30 US15
		Polish Brass	AABT30/30 US3
		Black Matt	AABT30/30 US19
32	32	Satin Nickel	AABT32/32 US15
		Polish Brass	AABT32/32 US3
		Black Matt	AABT32/32 US19
35	35	Satin Nickel	AABT35/35 US15
		Polish Brass	AABT35/35 US3
		Black Matt	AABT35/35 US19

Euro Profile Cylinder
Half thumbturn

Description: **Single Thumbturn Cylinder**

Cylinder length A	Cylinder length B	Finish	Art. No.
10	30	Satin Nickel	AACT/40 US15
		Polish Brass	AACT/40 US3
		Black Matt	AACT/40 US19
10	35	Satin Nickel	AACT/45 US15
		Polish Brass	AACT/45 US3
		Black Matt	AACT/45 US19

Performance that goes beyond standard

Dimple cylinders combine a high security appearance with proven pin-tumbler design. CY110 is a simple yet sophisticated solution with features that exceed many basic, conventional master key solutions
These include patent protection, good master key capability, certified security to the toughest requirements of EN 1303:2015, multiple exclusive profiles, and – for single cylinders – an adjustable cam as standard

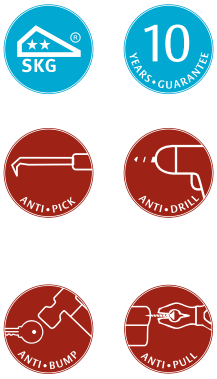

*Environmental Product Declaration (EPD) available. Find out more on middleeast/sustainability/epds/

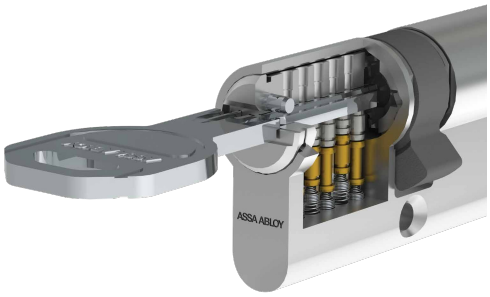

Style and convenience

CY110 brings exclusive European patented technology to your doorstep. Symmetrical faces and no sharp edges means the key works easily, and no matter which way it is inserted.

Long-term exclusivity

Already patent protected with a new pending application having expected lifetime extension till 2036.
Keys can only be duplicated by authorised partners, and extra keys can only be made on presentation of a valid security card.

Superior standard security

- 5 minutes drilling resistance
- 15kN pulling resistance*
- Picking resistance
- Bumping resistance (KD version only)
- 500,000 cycles performance in durability test**
- 240 hours corrosion resistance, above and beyond the 96 hours standard
- Certified security, compliant with

* according to EN 1303:2015

EN 1303:2015 security standard

category of us	durability	door mass & closing force	fire resistance	safety	corrosion	key related security	attack resistance
1	6	-	B	-	C	5	D**

** when used with security escutcheon

Great value for money

- Patented – keys only available from authorised partners
- User friendly adjustable cam as standard in single cylinders
- Complex keyway enhances security
- Many exclusive profiles available
- Strong and stylish looking key

- Availabe as a master key solution (MKS), keyed alike (KA) and keyed to differ (KD)
- High-quality satin nickel finish
- Anti-drill (optional)
- DIN 18252 cam for euro cylinders
- Offset lengths available
- Lengths starting at 30 (one side) available in 5mm increment up to 80 (one side)

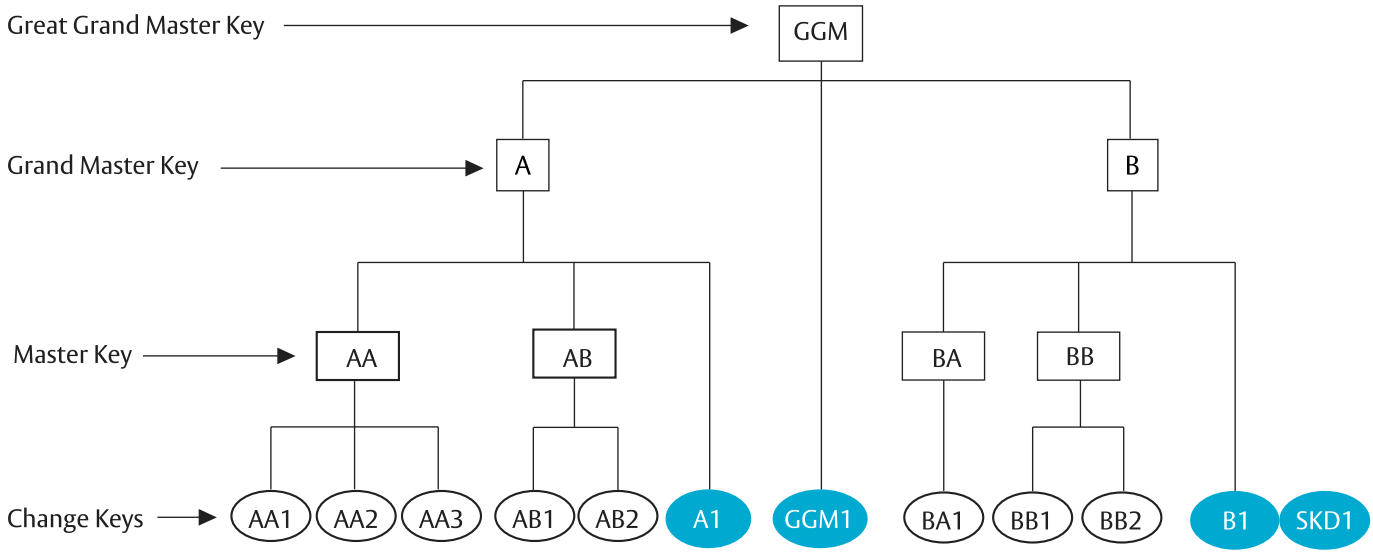

CY110 Cylinder
Half cylinder

Description: **Single Cylinder**
Master keying optional (Great Grand Master key)

Cylinder length		Key Differ	Master key
A	B		
10	30	PE900U3AG0.1100	PE900U3MG0.1100
10	35	PE900U3AH0.1100	PE900U3MH0.1100

CY110 Cylinder
Double cylinder

Description: **Privacy Cylinder**
Master keying optional (Great Grand Master key)

Cylinder length		Key Differ	Master key
A	B		
30	30	PE900U3AG0.1100	PE90213MGG.1100
35	35	PE90213AHH.1100	PE90213MHH.1100

CY110 Cylinder
Cylinder with Thumbturn

Description: **Cylinder with Thumbturn**
Master keying optional (Great Grand Master key)

Cylinder length		Key Differ	Master key
A	B		
30	30	PE90353AGG.1100	PE90353MGG.1100
35	35	PE90353AHH.1100	PE90353MHH.1100

What is CLIQ technology?

HIP

- CLIQ is a technology developed by the ASSA ABLOY Group
- CLIQ unites and optimises the features of mechanics and electronics
- The ideal electronic Master Key System solution without any cables
- eCLIQ purely electronic solutions offers higher security and more flexibility than any other traditional locking system

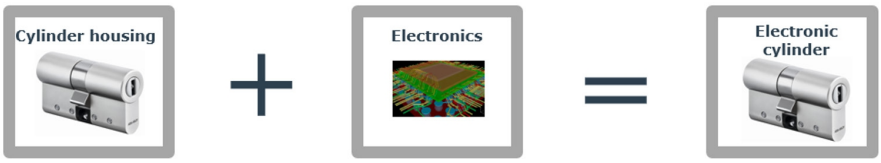

The main system components

eCLIQ - The next generation of locking systems

- Unique, innovation based on the proven ASSA ABLOY CLIQTM technology
- A purely electronic, innovative locking cylinder technology for maximum systemflexibility
- Extremely compact and secure locking cylinders, allows for a wide range of cylinder type applications
- A reversible key with a new striking design
- The latest generation of chip technology
  - High encoding efficiency
  - High processing speed
  - Efficient energy management
  - High security, 128 bit AES encryption
- ECLIQ: secure, quick, powerful, energy-efficient

eCLIQ - Automatic cylinder lubrication

- Innovative integrated lubricant depot
- Automatic cylinder lubrication (cylinder will be lubricated each time key is inserted and turned)
- Maintenance free electronic cylinder up to 200,000 cycles

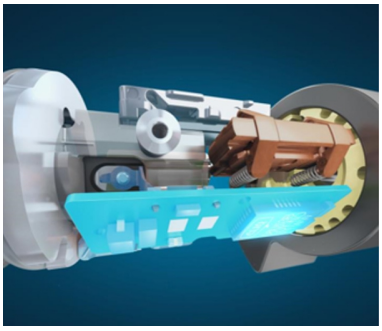

eCLIQ - The next generation of locking systems

Integrated memory chip
Key-unique and locking system encryption - AES 128
Optional enhanced drilling protection
Optional dust and rain protection cap, IP55
Emergency mechanism with user key
Several free rotation angles (optional)
Temperature range -25°C/+85°C
Compiles with the latest;
EN 15684:2013-2 Standard
VdS 2156-2 Guideline

eCLIQ - Standards and compliance

Complies to the latest DIN EN standard and VdS guideline
Requirements and test methods: Mechatronic locking cylinders

DIN EN 15684: 2013_01
New standard for mechatronic locking cylinders
Published February 2013

VdS 2156-2en
Guideline for Physical Security Devices
Updated guideline
Valid from June 2013

eCLIQ is the first electronic cylinder solution which complies with the latest version of DIN EN and VdS standard

eCLIQ - Highlights of the new EN/VDS standard

DIN EN-15684:2013-01 Standard
Shock/vibration tests
ESD tests (Electro Static Discharge test)
Temperature and environmental tests
IP protection class tests (dust/water)
Tested with increased voltage
Tested with permanent magnet
Fire test
To be supplied with extensive user manuals

EN 15684
EUROPEAN STANDARD

cen
EUROPEAN COMMITTEE FOR STANDARDIZATION

PIVCERT

VdS 2156-2 Guideline
Test permanent load up to 200,000 cylces
Class C = highest performance
Application of guideline is optional

VdS

eCLIQ - ATEX certified

EC-Type Examination Certificate (according to Directive 94/9/EC, Annex III)
Equipment and Protective Systems intended for use in Potentially Explosive Atmospheres, Directive 94/9/EC
EC-Type Examination Certificate Number: IBExU14ATEX1125
Equipment: Locking System
Type eCLIQ
Manufacturer: ASSA ABLOY Sicherheistechnik GmbH
Address: Goerzallee 299
14167 Berlin
Germany

Ex

ATEX certificate

Cylindrical Lever Locksets

ASSA ABLOY

Experience a safer
and more open world

Cylindrical Lever Lockset
(ANSI Grade 1)

ASSA ABLOY

AGL 8000 Series
Extra Heavy-duty
Type

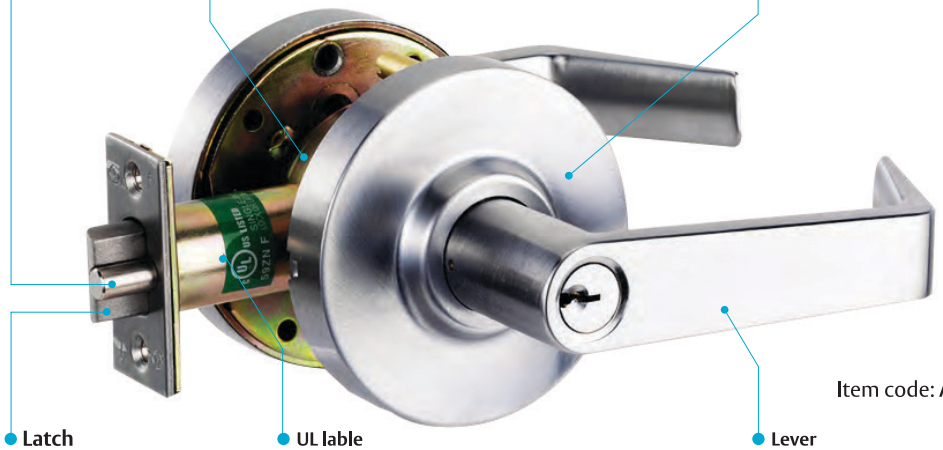

Item code: **AGL-8000E4-ENT**

Specification

Certification	ANSI A156.2 Grade 1, UL10C 3Hours Fire Rating Listed, BHMA Listed
Backset	2-3/8"(60mm) or 2-3/4"(70mm)
Latch Front	57x28.4mm
Strike	'T' Stirke or 'ASA' Strike
Door Thickness	1-3/8"(35mm)~1-3/4(45mm)
Rose	dia. 85mm (Optional Throw-bolt type) or dia. 90mm (Fixed Throw-bolt type)
Latchbolt	13.4mm Stainless Steel Throw
Cylinder	Solid Brass, 6pins Cylinder w/ Schlage 'C' Keyway
Key system	KA, KD, MK, GMK
Finish	SC, PB, 10BE

Design

'L' Lever (IC) & Flat Rose

'R' Lever & Round Rose

'I' Lever & Flat Rose

Cylindrical Lever Lockset
(ANSI Grade 2)

ASSA ABLOY

AGL-7000 Series

Heavy-duty Type

Item code: **AGL-7000F4-ENT-IC**

Item code: **AGL-7000I4-ENT**

Specification

Certification	ANSI A156.2 Grade 2, UL10C 3Hours Fire Rating Listed, BHMA Listed
Backset	2-3/8"(60mm) or 2-3/4"(70mm)
Door Thickness	1-3/8"(35mm)~1-3/4(45mm)
Latch Front	57x28.4mm
Strike	'T' Stirke or 'ASA' Strike
Rose	dia. 85mm (Optional Throw-bolt type)
Latchbolt	12.4mm Stainless Steel Throw
Cylinder	Solid Brass, 6pins Cylinder w/ Schlage 'C' Keyway
Key system	KA, KD, MK, GMK
Finish	SC, PB, 10BE

AGL-1000 Series

Light-duty Type

Item code: **AGL-1000F4-ENT**

Item code: **AGL-1000F4-PAS**

Specification

Certification	ANSI A156.2 Grade 2, UL10C 3Hours Fire Rating Listed, BHMA Listed
Backset	2-3/8"(60mm) or 2-3/4"(70mm)
Door Thickness	1-3/8"(35mm)~1-3/4(45mm)
Latch Front	57x28.4MM
Strike	'T' Stirke or 'ASA' Strike
Rose	dia. 85mm (Optional Throw-bolt type)
Latchbolt	12.4mm Brass Throw
Cylinder	Solid Brass, 6pins Cylinder w/ Schlage 'C' Keyway
Key system	KA, KD, MK, GMK
Finish	SC, PB, 10BE
Standard keyway	C4

Finish

SC PB 10BE

Cylindrical Lever Lockset
(ANSI Grade 1)

ASSA ABLOY

AGK-8000 Series

Extra Heavy-duty Type

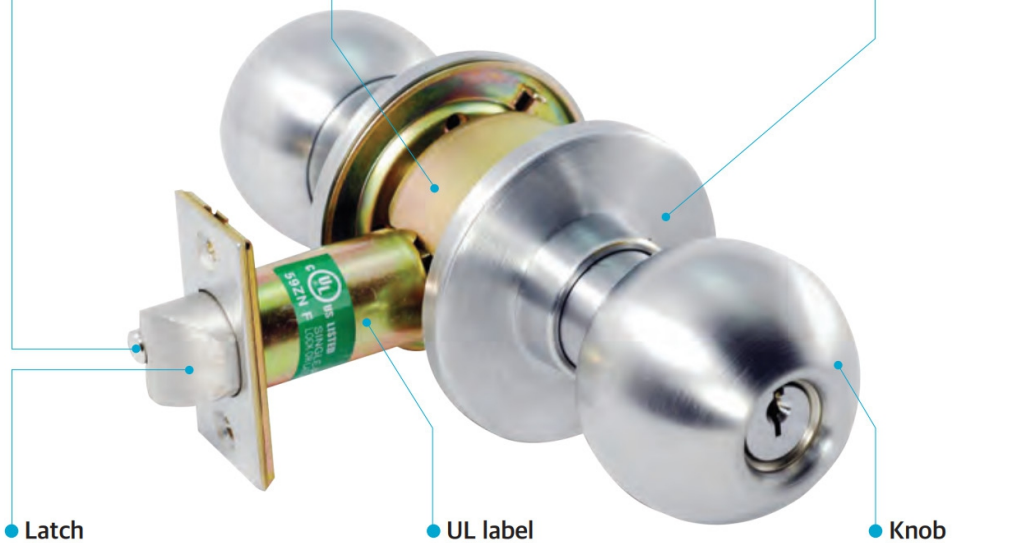

Item code: **AGK-8000-ENT**

Specification

Certification	ANSI A156.2 Grade 1, UL10C 3Hours Fire Rating Listed, BHMA Listed
Backset	2-3/8"(60mm) or 2-3/4"(70mm)
Door Thickness	1-3/8"(35mm)~1-3/4(45mm)
Latch Front	57x28.4mm
Strike	'T' Stirke or 'ASA' Strike
Rose	dia. 73mm or dia. 80mm
Latchbolt	13.4mm Stainless Steel Throw
Cylinder	Solid Brass, 6pins Cylinder w/ Schlage 'C' Keyway
Key system	KA, KD, MK, GMK
Finish	SC, PB, 10BE

Finish

SS

PB

10BE

Cylindrical Knob Lockset

ASSA ABLOY

AGK-7000 Series

Heavy-duty Type

Item code: **AGK-7000-ENT-IC**

Specification

Certification	ANSI A156.2 Grade 2, UL10C 3Hours Fire Rating Listed, BHMA Listed
Backset	2-3/8"(60mm) or 2-3/4"(70mm)
Door Thickness	1-3/8"(35mm)~1-3/4(45mm)
Latch Front	57x28.4mm
Strike	'T' Stirke or 'ASA' Strike
Rose	dia. 80mm
Latchbolt	12.4mm Stainless Steel Throw
Cylinder	Solid Brass, 6pins Cylinder w/ Schlage 'C' Keyway
Key system	KA, KD, MK, GMK
Finish	SC, PB, 10BE

AGK-1000 Series

Light-duty Type

Item code: **AGK-1000-ENT**

Item code: **AGK-1000-PAS**

Specification

Certification	ANSI A156.2 Grade 1, UL10C 3Hours Fire Rating Listed, BHMA Listed
Backset	2-3/8"(60mm) or 2-3/4"(70mm)
Door Thickness	1-3/8"(35mm)~1-3/4(45mm)
Latch Front	57x28.4mm
Strike	'T' Stirke or 'ASA' Strike
Rose	dia. 80mm
Latchbolt	12.4mm Stainless Steel Throw
Cylinder	Solid Brass, 6pins Cylinder w/ Schlage 'C' Keyway
Key system	KA, KD, MK, GMK
Finish	SC, PB, 10BE

Function	Function (Angle No.)	ANSI No.	Out / In	Description
	Entrance 30	F109	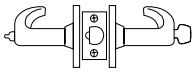	• Latchbolt operated by lever either side unless outside lever is locked by push-turn button in inside lever • The locked outside lever is released by key outside or operation of inside lever • Pushing and turning inside button will keep outside lever to remain locked • Push / Turned button must be released manually
	Storeroom 50	F86	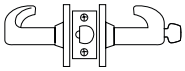	• Outside lever always rigid • Latchbolt operated by key in outside lever or by inside lever
	Classroom 40	F84	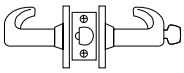	• Inside lever always operative • Key outside locks / unlocks outside lever only • Latchbolt operated by lever either side except when outside locks outside lever
	Privacy 20	F76	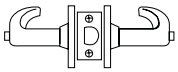	• Latchbolt operated by lever either side unless outside lever is locked by push button in inside lever • Unlocked by turning inside lever • Emergency button in outside lever unlocks with use of a blade screw driver or a coin in outside lever and releases inside button
	Passage 10	F75	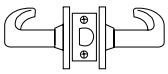	• Latchbolt operated by lever either side
	Dummy DT		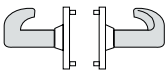	• Lever always rigid
	Dormitory 90	F90	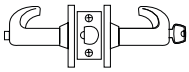	• Deadlocking latch • Latch by either lever unless outside lever is lock by push button inside or key outside • Rotating inside lever or closing door releases inside button only, but does not unlock the outside lever if locked by key • Key outside locks or unlocks outside lever and also retracts latchbolt when locked
	Asylum 50DB	F87	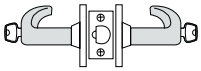	• Deadlocking latch • Both levers rigid at all times • Latch by key either side • Use only on rooms with more than one exit
	Classroom Intruder 40S	F110	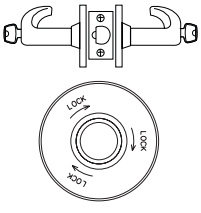	• Deadlocking latch • Latch by either lever unless outside lever is locked by key • Key in either lever locks or unlocks outside lever • Inside lever always operable • Locked indication on inside rose standard with this function

Code			Finish Description	Base Material
Angel	US	BHMA		
PB	US3	605	Bright Brass, Clear coated	Brass
SB	US4	606	Satin Brass, Clear coated	Brass
10	US10	612	Satin Bronze, Clear coated	Bronze
10B	US10B	613	Dark Oxidized Satin Bronze, Oil Rubbed	Bronze
		704	Dark Oxidized Satin Bronze Plated	Zinc
		727	Satin Brass Clear coated	Brass
PC	US26	625	Polished Chrome	Brass, Bronze
SC	US26D	626	Satin Chromium Plated over Nickel	Brass, Bronze
		682	Satin Chromium Plated over Nickel	Zinc
SS	US32D	630	Satin Stainless Steel	Stainless Steel
SN	US15	670	Satin Nickel Plated	Aluminum
		619	Satin Nickel Plated, Clear coated	Brass, Bronze

AAD2000

ANSI Grade 2
Medium-duty
Deadbolt

AAD2000 Series

AAD2000

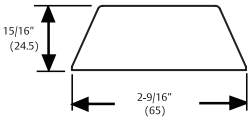

Finish

US32D

Series Name	Function Code	Finish Code	Ordering Example
D2000	Single Cylinder = 1	US32D	D2012 (Function Code) D2022
	Double Cylinder = 2		

Specification

- Standard: ANSI Grade 2
- Testing Cycles: 400,000 cycles tested
- Materials: Zinc-dic-cast
- Backset: 60mm / 70mm (adjustable)
- Door Thickness: 35 oto 50mm

Panic Exit Devices

ASSA ABLOY

Experience a safer
and more open world

Features and Benefits

Panic Exit Devices AAED400 Series

Features:
- Surface mounted, rim type
- Slim, neat design
- 500,000 cycles tested
- Fire rated for 3 hours

Benefits:
- Ease of installation
- Superior aesthetics
- High durability
- Suitable for fire rated doors
- External cylinder and lever option available

Standard & Certification

UL 10C and ANSI A156.3 Grade 1

Technical details:
- Rim type push bar
- 1045mm as standard
- 304 stainless steel material
- For doors up to 1200 x 2400mm in standard
- Easy installation and adjustment
- Stainless steel or galvanized steel finish
- Compatible accessories
- Standard euro profile cylinder
- UL listed for fire exit hardware up to 3 hours
- Suitable for single leaf and double leaf doors
- With satin chrome external lever trim

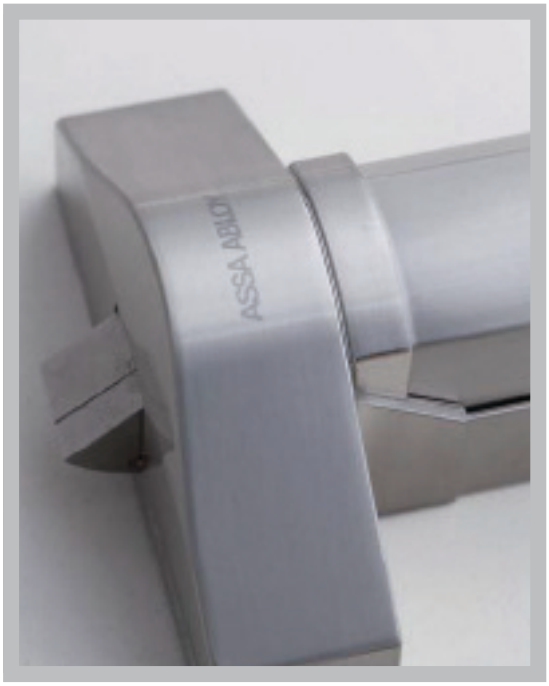

Panic Exit Device

AAED 401S US32D

ASSA ABLOY Exit Device 401:

- Panic exit device with central locking point - RIM
- Painted galvanized steel or stainless steel finish
- With AAET411SC external lever trim in satin chrome finish

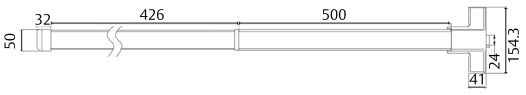

Panic Exit Device

AAED 402S US32D

ASSA ABLOY Exit Device 402:

- Panic exit device with double locking points - RIM
- Painted galvanized steel or stainless steel finish
- With AAET411SC external lever trim in satin chrome finish

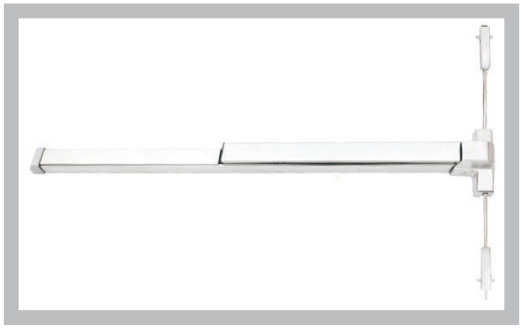

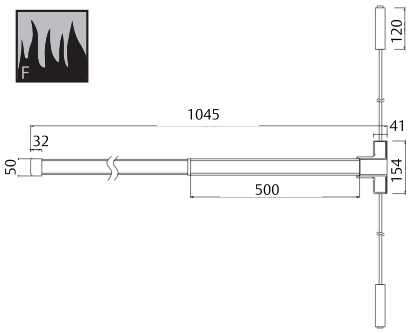

Panic Exit Trim

ASSA ABLOY Panic Exit Trim with rose

- Panic exit trim in satin chrome finish

Type	Art. No.
With cylinder	AAET 411SC
Without cylinder	AAET 410SC

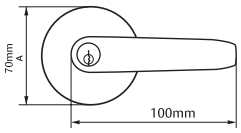

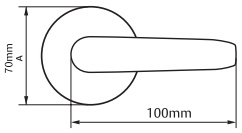

Panic Exit Trim

ASSA ABLOY Panic Exit Trim with backplate

- Panic exit trim in satin stainless steel finish

Type	Art. No.
Without cylinder	AAET 008E US32D

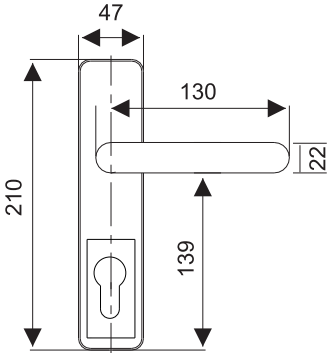

Features and Benefits

HIP

Exit Devices
AA21 Series

Features:
- Surface mounted
- Slim, neat design
- 500,000 cycles tested
- Fire rated
- Wide range of option
- ANSI/BHMA A156.3 Grade 1
- UL Listed

Benefits:
- Ease of installation
- Superior aesthetics
- High durability
- Suitable for fire rated doors
- Provide a ready means of escape at all times by the single action of pushing on a horizontal bar fitted across the full width of a door

Standard & Certification

UL 10C and ANSI A156.3 Grade 1

Technical details:
- Door Suitability
- For emergency passage doors
- Suitable for single and double doors up to1220mm wide each leaf and 2100mm in height (available up to 3000mm upon request)

Material
- Horizontal push bar made of 304 stainless steel
- Latchbolt made of sintering stainless and auxiliary bolt made of die-cast stainless steel
- Lever and trim made of 304 stainless steel
- Strike plate made of die-casting carbon steel with roller to reduce the friction of opening and closing

Finish
- 630 Satin Stainless Steel Types
- AA21R- Rim
- AA21V- Vertical
- AA21M-Mortise
  AA 21CV Concealed Vertical Rod
  AA 21V (-3) Three Points Vertical Rod

Electric Function (For AA21M)
- Fail Safe (FSA)
- Fail Secure (FSE)
- 480mA@12VDC (Standard)
- 240mA@24VDC

Option

Option
- REX (Request to Exit)-An SPDT switch that monitors activation of the free Push Rail. REX is available for all mechanical and electrified functions and can be supplied alone or with either LBM.
- LBM (Latchbolt Monitor)-An SPDT switch that monitors full retraction of the main latch. LBM is available for all mechanical and electrified functions and can be supplied alone or with REX.

AA21R

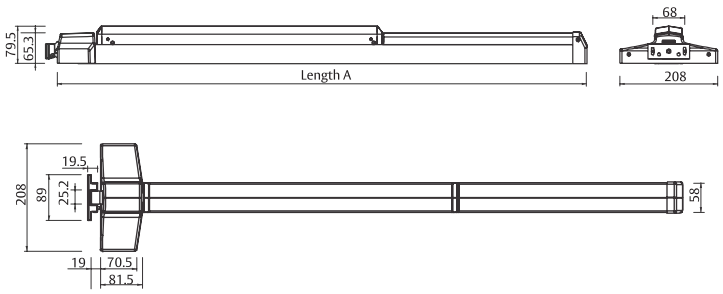

Exit Device Size (inch)	Suitable Door Width (mm)	Length A (mm)
24"	510 - 600	530
30"	610 - 750	683
36"	760 - 910	835
48"	920 - 1200	1130

AA21M

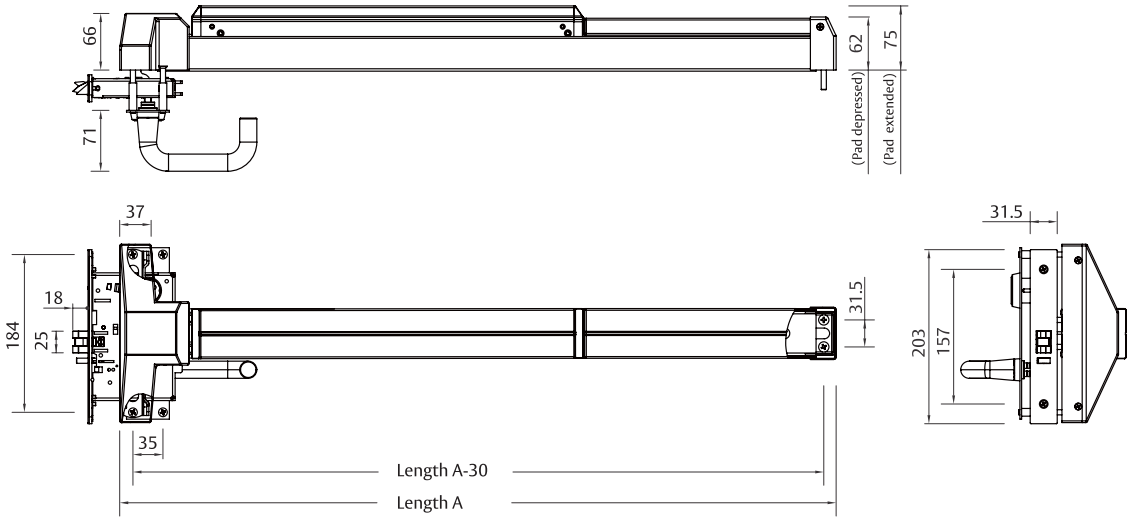

AA21V

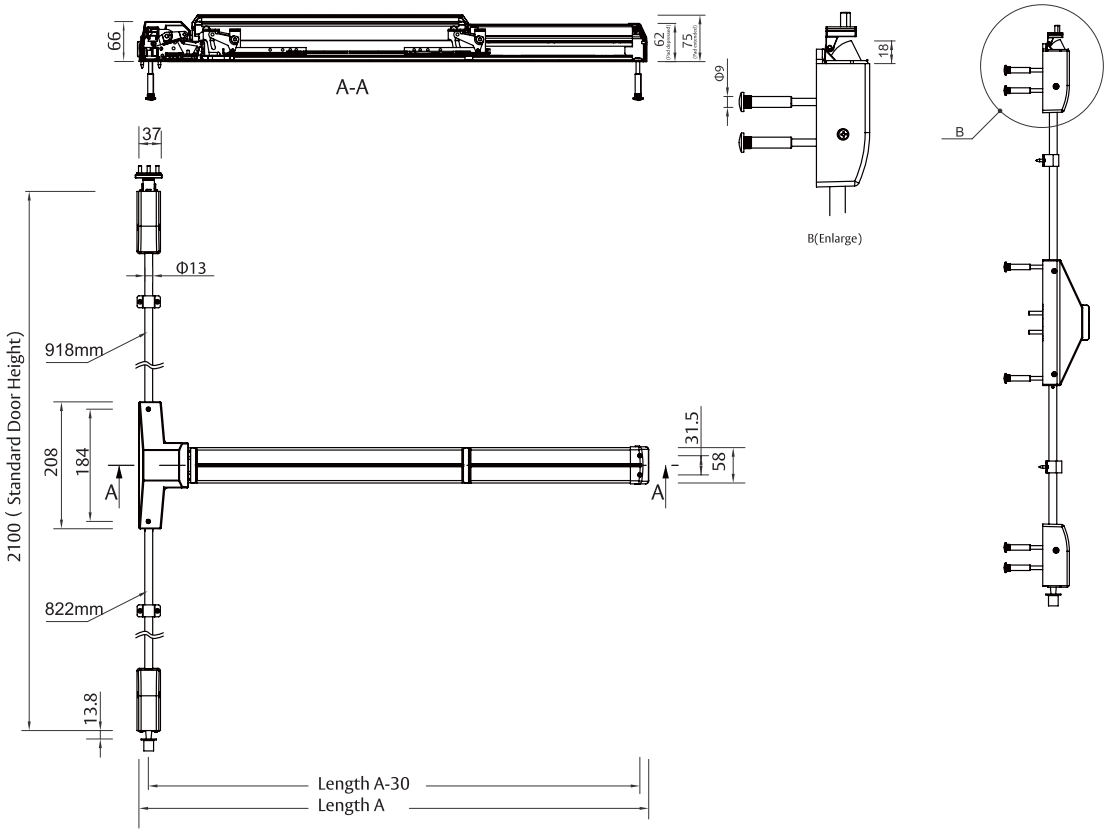

AA21CV Concealed Vertical Rod

AA21CV

Concealed Vertical Rod

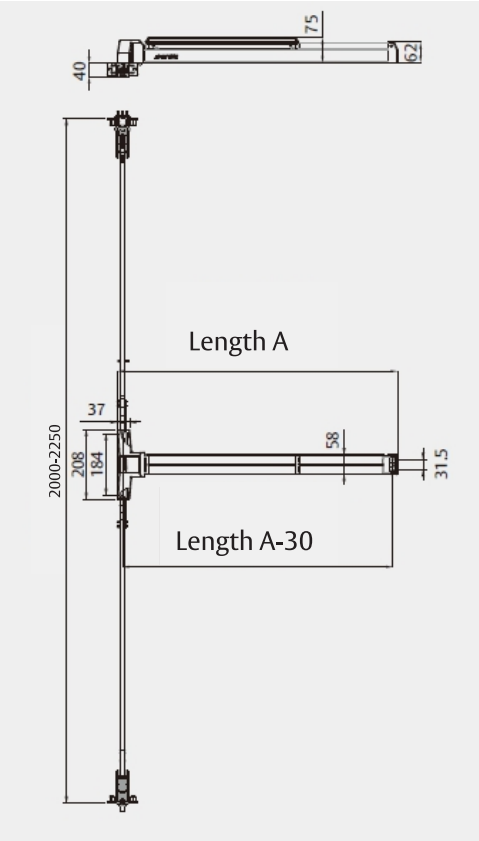

AA21V -3/5 Multi -points Vertical Rod

AA21V-3/5

Multi-points Vertical Rod

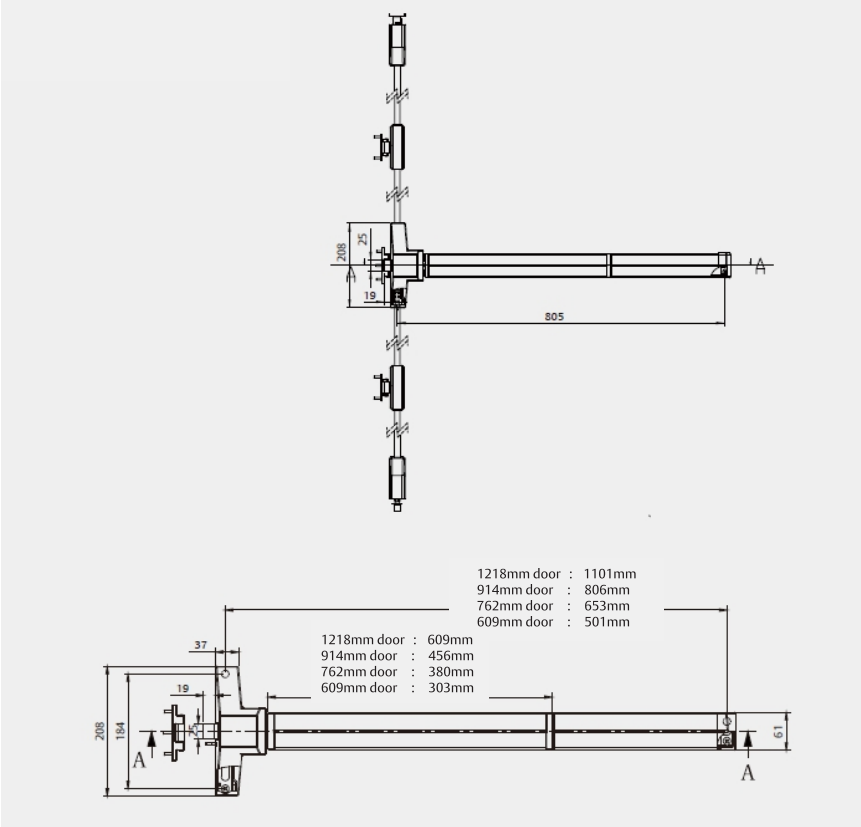

Function	ANSI Function No.	Model No.	Exit Device Type	Description	Inside Outside
Exit	01	AA21R01	Rim Type		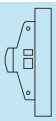
		AA21V01	Surface Vertical Type		
		AA21M01	Mortise	• Exit only • No outside operation	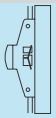
		AA21CV01	Concealed Vertical Rod		
		AA21V3-01	3 Points Vertical Rod		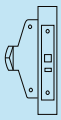
		AA22V5-01	5 Points Vertical Rod		
Classroom	08	AA21R08	Rim Type	• Outside lever retracts latchbolt • Key locks and unlocks lever	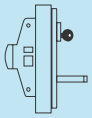
		AA21V08	Surface Vertical Type		
		AA21M05	Mortise		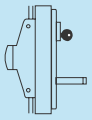
		AA21CV-08	Concealed Vertical Rod		
	05	AA21V3-08	3 Points Vertical Rod	• Entrance by knob or lever • Key locks and unlocks knobs or lever	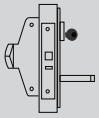
		AA22V5-08	5 Points Vertical Rod		
Night Latch	03	AA21R03	Rim Type	• Entrance by Trim when latch is released by key • Key removable only when locked	
		AA21M03	Mortise		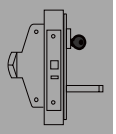
		AA21EM-FSA	Electrified Mortise (Fail Safe)		
		AA21EM-FSE	Electrified Mortise (Fail Secure)		
Passage	14	AA21R14	Rim Type		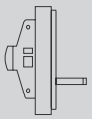
		AA21V14	Surface Vertical Type		
		AA21M14	Mortise	• Entrance by Trim • Exit by pushing bar inside	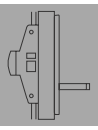
		AA21CV14	Concealed Vertical Rod		
		AA21V3-14	3 Points Vertical Rod		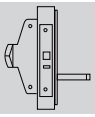
		AA22V5-14	5 Points Vertical Rod		

Remarks:

- Electric trims are option for mechanical panic exit device
- Supply cylinder is for door thickness 40-54mm

Typical Door Installation

Single Leaf Door

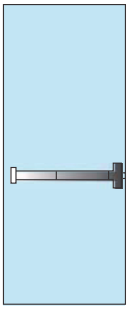

Rim device

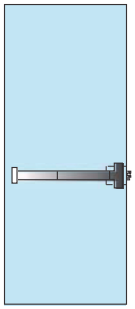

Rim device with mortise

Windstorm Door

Multipoint
Panic Exit

Double Leaf Door

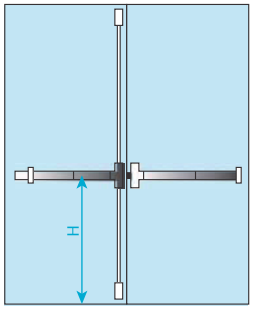

AA21R-D and AA21V
Pair of rebated doors - 1 vertical rod device, 1 Rim device and 1 double door strike - same direction

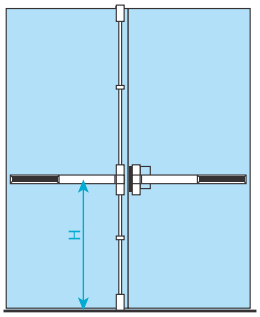

AA21M and AA21V
Mortise lock and surface mounted vertical rod device combination - same direction

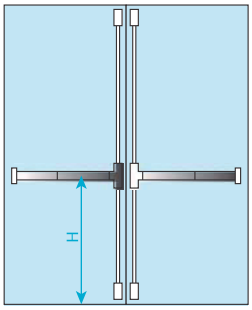

AA21V (2 sets)
Pair of non-rebated doors with 2 vertical devices - same direction (do not use with overlapping astragal)

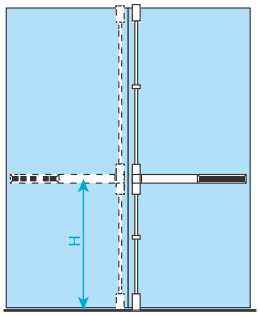

AA21V (2 sets)
Two vertical rods - double egress

Remarks

- H = centerline of chassis and rail
- assembly to finished floor 1014mm for standard application
- Device for door height 2100mm, but available up to 3000mm upon request

How to order : PED

Art. No.		Push Bar Length		Door Handing		Monitor (option)		Finish		Trim & Cylinder (Option)		
Example: AA21R01	-	*24*	-	*LHR*	-	*REX*	-	*630*	-	*Trim*	-	*Cylinder*
AA21R01 AA21V01 AA21M01 AA21R08 AA21V08 AA21M05 AA21R03 AA21M03 AA21EM-FSA AA21EM-FSE AA21R14 AA21V14 AA21M14 AA21R-D*	-	24 - 24" 30 - 30" 36 - 36"	-	LHR (Left Hand - Reverse) RHR (Right Hand - Reverse)	-	REX LBM DPS** ALA	-	630 Satin Stainless Steel	-	See 'How to order: Trims and cylinder'	-	See 'How to order: Trims and cylinder'

* AA21R-D is AA21R device with double strike for double leaf door.
** DPS is only for AA21EM

- Device for door height 2100mm, but available up to 300mm upon request.
- Device installed at centerline of chassis and rail assembly to finished floor 1014mm for standard application.

How to order: Trims and Cylinder

Escutcheon			Lever		Cylinder (Option)		Finish	
Example: LEN		-	*H01*	-	*CY32Q*	-	*630*	
LEN	for R and V (Passage function)	-	H01	-	CY32R*	-	630	Satin Stainless Steel
LEC – R	for R and V (Classroom function)		H02		CY32Q			
LEC – M	for Mortise and Electrified Mortise		H03		CY32E			
ELEC – FSA	Electrical function (Fail Safe) for R and V		H04		CY32T			
ELEC – FSE	Electrical function (Fail Secure) for R and V		H05					

* CY32R is rim cylinder for outside of rim and surface vertical exit device

LEC-R

Model No.: LEC - R

- For AA21R, AA21V Classroom function
- ANIS Cylinder CY32Q
- Lever H01-H05

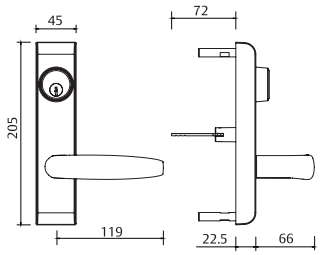

LEC-M

Model No.: LEC - M

- For device with electrified Mortise
- ANIS Cylinder CY32E
- Lever H01-H05

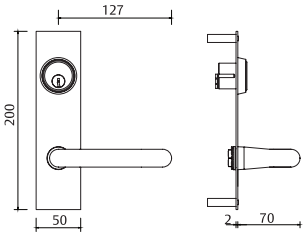

LEN

Model No.: LEN

- For Passage function
- Lever H01-H05

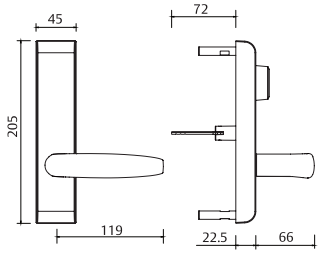

ELEC-FSA

Model No.: ELEC-FSA

- For AA21R, AA21V desive with electrified Mortise (Fail Safe)
- ANIS Cylinder CY32T
- Lever H01-H05

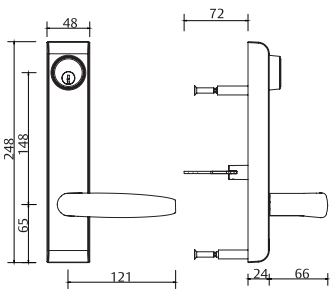

ELEC-FSE

Model No.: ELEC-FSE

- For AA21R, AA21V desive with electrified Mortise (Fail Secure)
- ANIS Cylinder CY32T
- Lever H01-H05

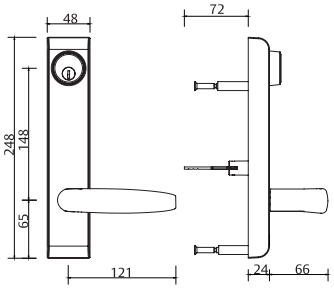

CY-32R

Model No.: CY32R

Device: Rim Type Panic

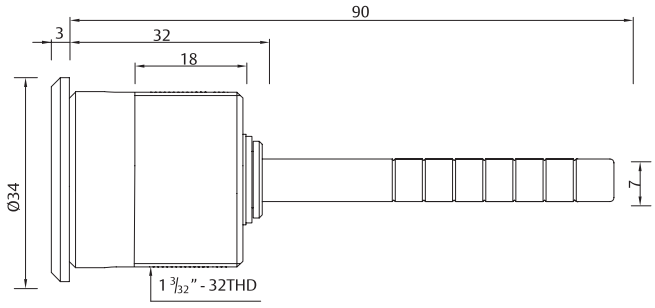

CYR-32Q

Model No.: CY32Q

Device: Mortise Type Panic

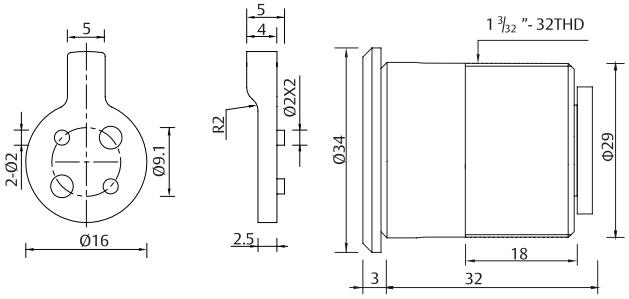

STRIKE

Model No.: Double Strike

Finish: 630 Satin Stainless Steel

Device: For AA21 R-D

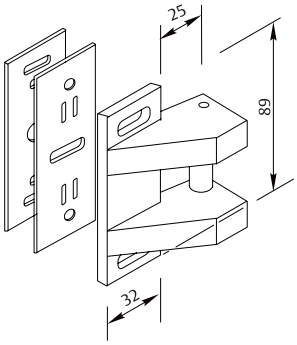

Lever Design

H01

Model No. : H01
Material : 304 Stainless Steel
Construction : Hollow
Finish : 630 Satin Stainless Steel

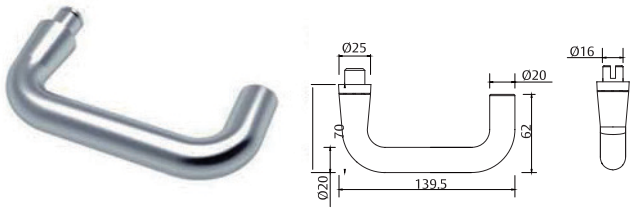

H02

Model No. : H02
Material : 304 Stainless Steel
Construction : Solid
Finish : 630 Satin Stainless Steel

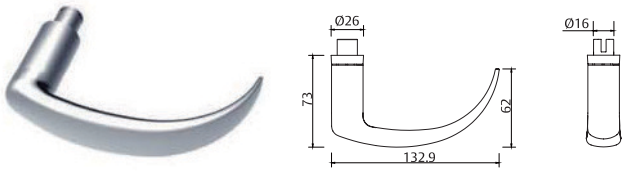

H03

Model No. : H03
Material : 304 Stainless Steel
Construction : Solid
Finish : 630 Satin Stainless Steel

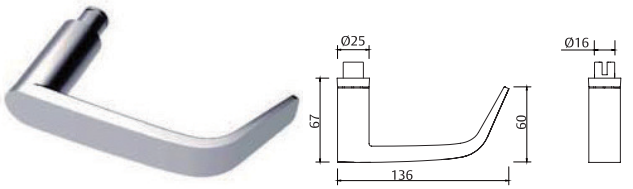

H04

Model No. : H04
Material : 304 Stainless Steel
Construction : Hollow
Finish : 630 Satin Stainless Steel

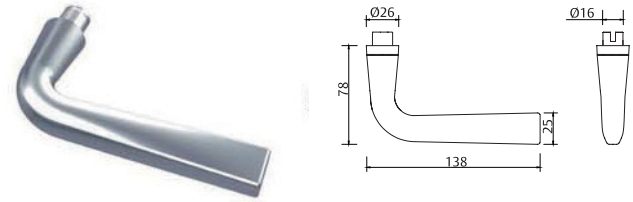

H05

Model No. : H05
Material : 304 Stainless Steel
Construction : Hollow
Finish : 630 Satin Stainless Steel

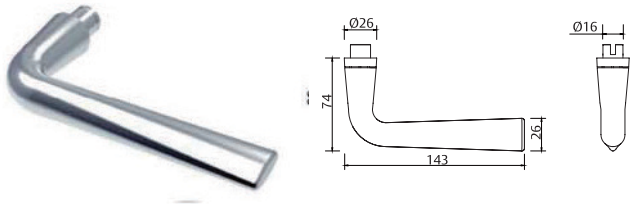

Panic push bars type A
with minimal installation requirements

Panic push bar, metal frame door version

The OneSystem panic push bars are perfect for use on smoke protection doors, fire doors and escape doors. The uniform design compliment the new door closers and many other components from the ASSA ABLOY product portfolio. The flat overlap is therefore ideal for narrow style doors. The push bar can be retrofitted on existing drilled holes on oval roses. The panic push bars are compatible with all OneSystem panic locks.

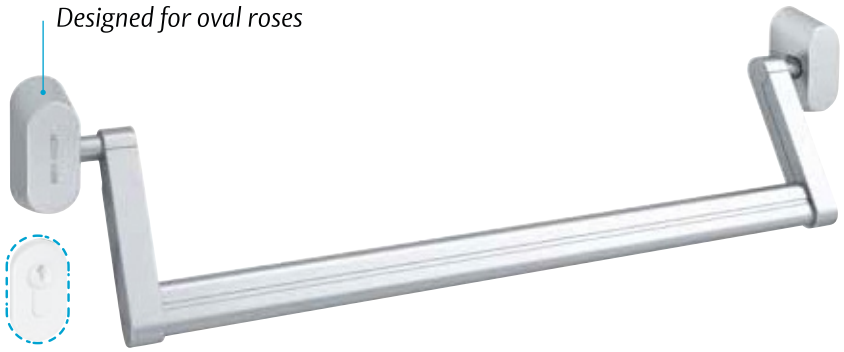

Panic push bar, wooden and steel door version

The panic push bar is also available as a wide style version and has the same function features as the narrow style version. It is available for mounting on existing drilled holes for round roses with corresponding cove.

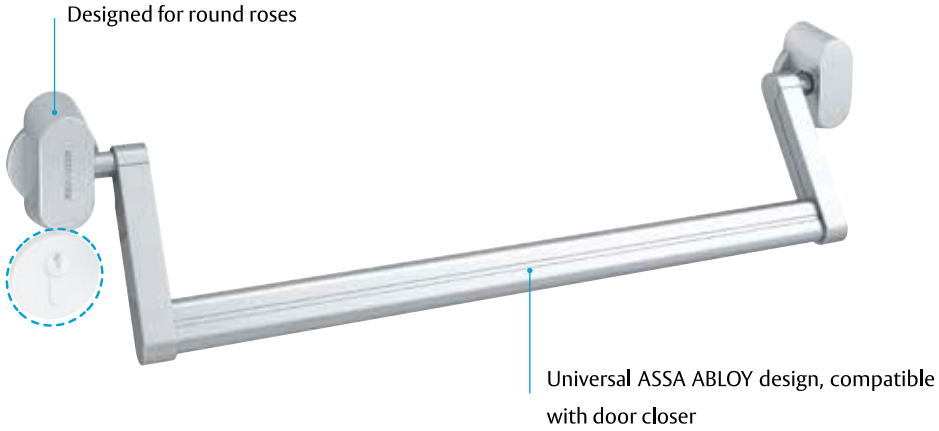

Panic bars type B
in uniform ASSA ABLOY design

Panic push bar, metal frame door version

The OneSystem panic touch bars are suitable for use on smoke protection doors, fire doors and escape doors. Their reduced, slim-line design matches the new door closers from the ASSA ABLOY complete range and many other components.

The flat overlap is ideal for narrow style doors. The touch bar can be retrofitted easily and conveniently on existing drilled holes on oval roses. The panic touch bars are compatible with all OneSystem panic locks.

Panic touch bar, wooden and steel door version

The OneSystem panic touch bar for wide stile doors has the same features as the narrow style version. The installation on the existing drilled holes is extremely simple, too. The wide style version is available for round roses with corresponding covers.

Door Closers

ASSA ABLOY

Experience a safer
and more open world

Features & Benefits

Door Closer

Features:
- Non-handed system
- Fire rated options

Benefits:
- Versatile usage
- High durability

Standard & Certification

EN1154
EN1155

ANSI A156.4
UL10C

Technical details:
- Adjustable power sizes
- Suitable for wood, glass, metal and fire rated doors
- Available finishes - Silver, customized finishes available on request

Closer size selection according to EN1154

Door width (mm)	Max door weight (kg)	Closer size
<750	20kg	1
850	40kg	2
950	60kg	3
1100	80kg	4
1250	100kg	5
1400	120kg	6
1600	160kg	7

*All dimensions are in mm

Cam Motion® for optimum convenience in opening doors

Cam Motion® for optimum convenience in opening doors

Cam Motion® Technology:
ASSA ABLOY Cam Motion® technology enables guide rail door closers to comply with CEN TR 15894 requirements.

Safe in an emergency:
You'll be on the safe side with ASSA ABLOY since our door closers meet national and international provisions and regulations. Smoke protection and fire doors may only be fitted with door closer systems complying with EN1154/EN1155/EN1158. ASSA ABLOY supplies approved door closer systems for single and double leaf smoke and fire doors with different usage requirements.

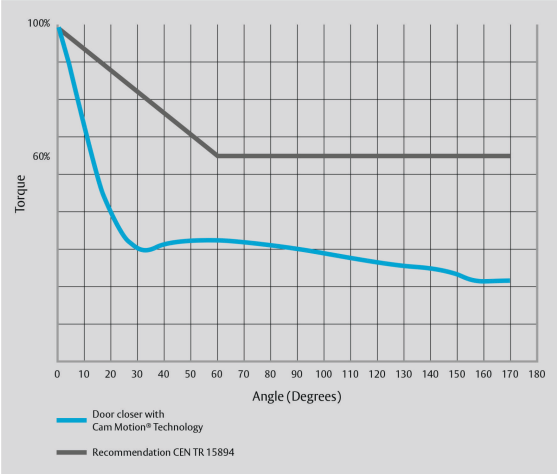

Door Closer

DC120

ASSA ABLOY DC120:

- Rack and Pinion door closer with link arm
- In compliance with EN1154, size EN2/3/4
- For single action doors up to 1100mm

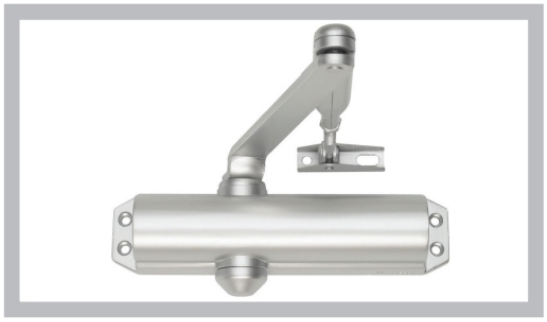

Characteristics of DC120:

- Can be used for left and right-handed doors
- Suitable for fire and smoke protection doors
- Closing speed, latching speed and back-check continuously adjustable using regulating valves
- Thermodynamic valves for consistent performance
- Closing force configurable
- Opening angle up to 180° (105° in mounting position size EN4)
- Standard colour: Silver

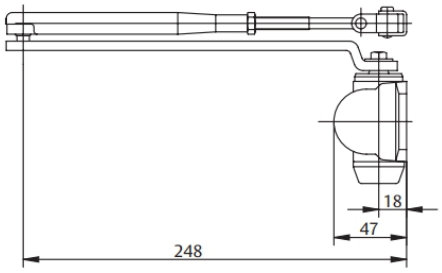

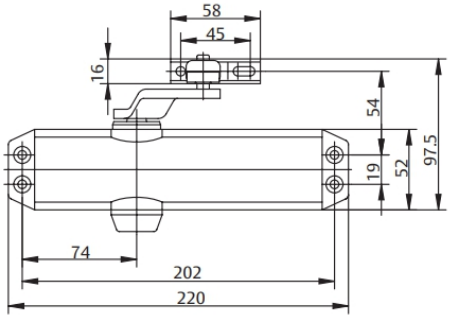

Door Closer

Technical details for DC120

Technical details:	
Closing force	EN2/3/4
Door width up to	1100mm
Fire and smoke protection	Yes
Door swing directions	Non-handed
Closing speed	Variable between 180°-15°
Latching speed	Variable between 15°-0°
Back-check	Variable above 75°
Weight	1.6kg
Height	52mm
Depth	47mm
Length	220mm
In compliance with	EN1154
CE marking for building products	Yes

Door Closer

DC850

ASSA ABLOY DC850

- Rack and Pinion door closer
- In compliance with EN 1154, size 2-4
- For single action doors up to 1100mm wide
- Suitable for fire and smoke protection doors

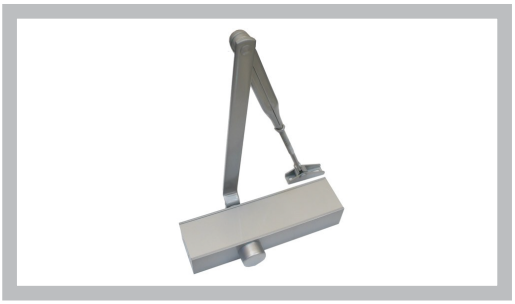

Characteristics of DC850

- Can be used for Left and Right-handed doors
- Suitable for fire and smoke protection doors
- Closing speed, Latching speed, and backcheck continouously adjustable using regulating valves
- Themordynamic valves for consistent performance
- Closing force configurable
- Opening angle up to 180°
- Standard colour: Silver

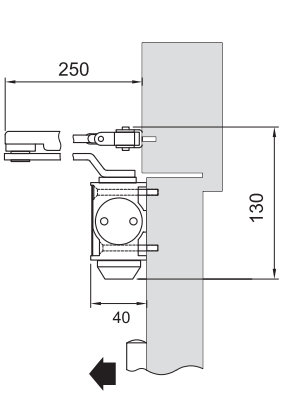

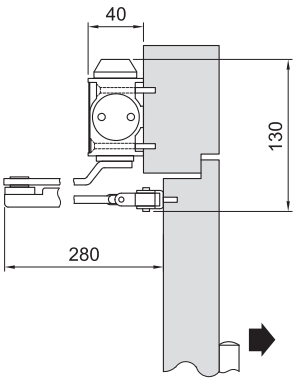

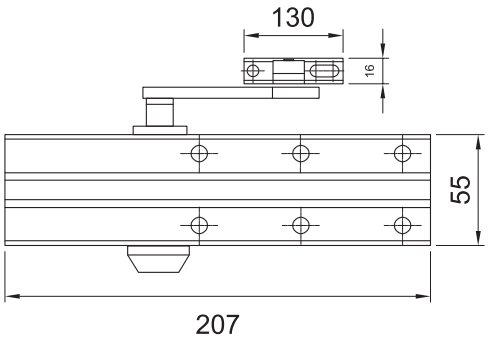

Door Closer

Mechnical details for DC850

Technical details	
Adjustable closing force	EN 2-4
Door width up to	1100mm
Door swing directions	Left / right handed
Closing speed	Variable between 180°-15°
Latching speed	Variable between 15°- 0°
Back-check	Variable above 75°
Hold-open	Optional
Height	55 mm
Depth	40 mm
Length	207 mm
In compliance with	EN 1154
CE marking for building products	Yes

Door Closer

DC870

ASSA ABLOY DC870

- Rack and Pinion door closer
- In compliance with EN 1154, size 2-5
- For single action doors up to 1250mm wide
- Suitable for fire and smoke protection doors

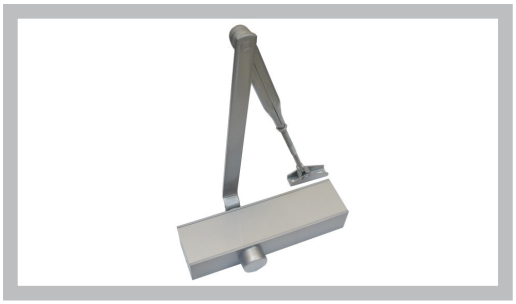

Characteristics of DC870

- Can be used for Left and Right-handed doors
- Suitable for fire and smoke protection doors
- Closing speed, Latching speed, and backcheck continouously adjustable using regulating valves
- Themordynamic valves for consistent performance
- Closing force configurable
- Opening angle up to 180°
- Standard colour: Silver

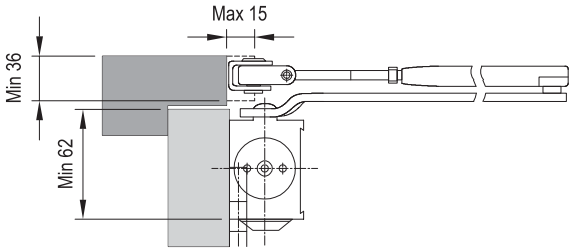

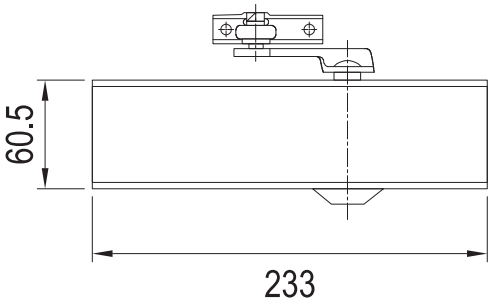

Door Closer

Mechnical details for DC870

Technical details	
Adjustable closing force	EN 2-5
Door width up to	1250mm
Door swing directions	Left / right handed
Closing speed	Variable between 180°-15°
Latching speed	Variable between 15°- 0°
Back-check	Variable above 75°
Hold-open	Optional
Height	60.5 mm
Depth	
Length	233 mm
In compliance with	EN 1154
CE marking for building products	Yes

Door Closer

DC200

ASSA ABLOY DC200

- Rack and Pinion door closer with link arm L190
- In compliance with EN1154, size 2-4
- For single action doors up to 1100mm wide
- Suitable for fire and smoke protection doors

Characteristics of DC200

- Can be used with integrated concealed mounting plate, suitable for fire and smoke protection doors
- Can be used for left and right-handed doors
- Link arm height-adjustable up to 14mm
- Closing speed, latching speed and back-check adjustable via front facing regulating valves
- Thermodynamic valves for consistent performance
- Adjustable closing force
- Opening angle up to 180°
- Effective back-check and latching speed adjustable
- Standard colour: Silver
- Customized finishes available on request

CE | ASSA ABLOY Sicherheitstechnik GmbH Bildstockstraße 20 72458 Albstadt | 10

1162-CPD-0484 | EN 1154:1996+A1:2002 | 4 | 8 | 4/2 | 1 | 1 | 4

Dangerous substances: None

F

Door Closer

Mechnical details for DC200

Technical details:

Closing force	Size EN2-4
Door width up to	1100mm
Fire and smoke protection	Yes
Door swing directions	Non-handed
Closing speed	Variable between 180°-15°
Latching speed	Variable between 15°-0°
Back-check	Variable above 75°
Hold-open mode (with hold-open link arm L191)	Adjustable 75°-150°, can be enabled and disabled
Height	60mm
Depth	47mm
Length	223mm
In compliance with	EN1154
CE marking for building products	Yes

Characteristics for hold open link arm L192 :

- Hold-open angle adjustable up to 150°
- Hold-open mode can be enabled and disabled as required
- Same installation as link arm
- Cannot be used with fire and smoke protection doors

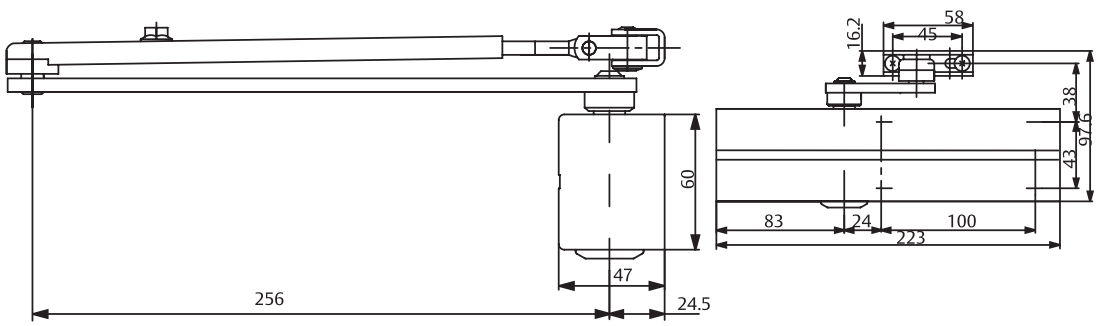

Door Closer

Installation

Standard

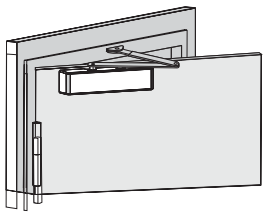

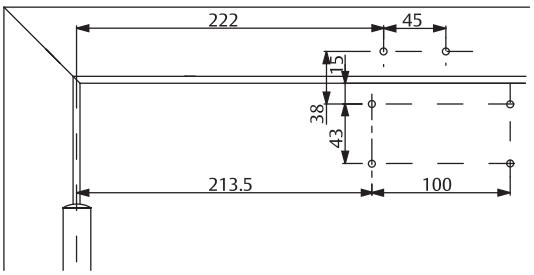

Top Jamp

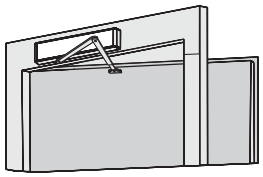

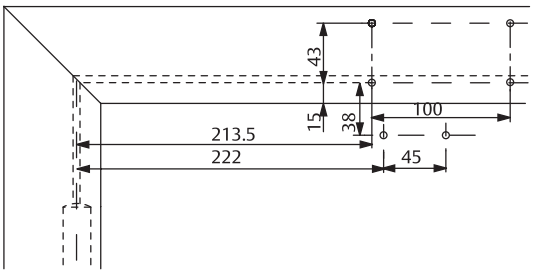

Door Closer

Accessories for DC200

Mounting plate A120

For mounting with drilling template according to EN1154 Supplement 1 (fire and smoke protection doors) and for universal use.

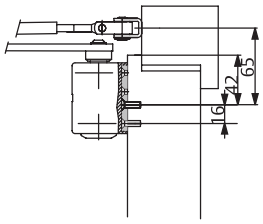

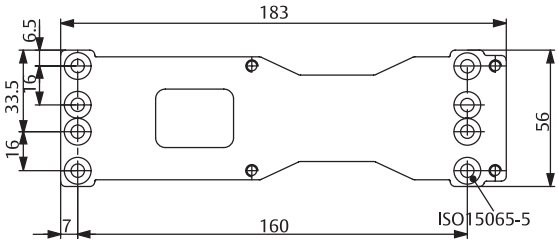

Angle bracket A122

For frame mounting in case of deep jamb, headroom reduced by 70mm. Check suitability for use on fire and smoke protection doors.

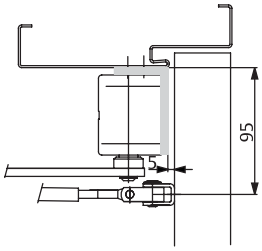

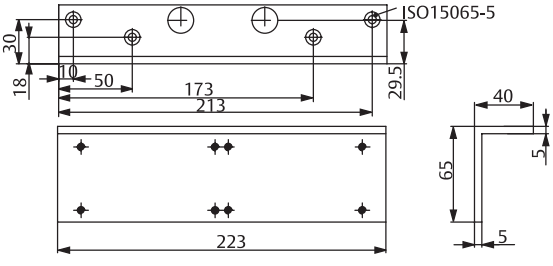

Parallel arm bracket A154

For frame mounting in case of deep jamb, headroom reduced by 70mm. Check suitability for use on fire and smoke protection doors.

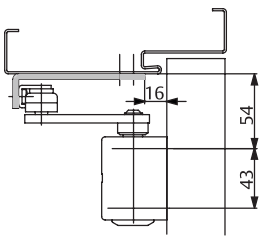

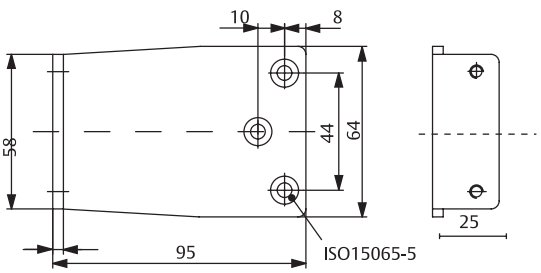

Door Closer

DC300

ASSA ABLOY DC300

- Rack and Pinion door closer with link arm L190
- In compliance with EN1154, size EN3-6
- For single action doors up to 1400mm wide
- Suitable for fire and smoke protection doors

Characteristics of DC300

- Can be used with integrated concealed mounting plate, suitable for fire and smoke protection doors
- Can be used for left and right-handed doors
- Link arm height-adjustable up to 14mm
- Closing speed, latching speed and back-check adjustable via front facing regulating valves
- Thermodynamic valves for consistent performance
- Adjustable closing force
- Opening angle up to 180°
- Effective back-check and latching speed adjustable
- Standard colour: Silver
- Customized finishes available on request

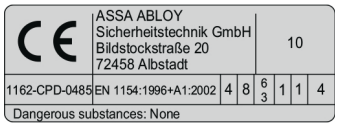

Door Closer

Mechnical details for DC300

Technical details:

Closing force	Size EN3-6
Door width up to	1400mm
Fire and smoke protection	Yes
Door swing directions	Non-handed
Closing speed	Variable between 180°-15°
Latching speed	Variable between 15°-0°
Back-check	Variable above 75°
Delayed closing (DC300DA)	Yes
Hold-open mode (with hold-open link arm L191)	Adjustable 75°-150°, can be enabled and disabled
Height	60mm
Depth	47mm
Length	260mm
In compliance with	EN1154
CE marking for building products	Yes

Characteristics for hold open link arm L192

- Hold-open angle adjustable up to 150˚
- Hold-open mode can be enabled and disabled as required
- Same installation as link arm
- Cannot be used with fire and smoke protection doors

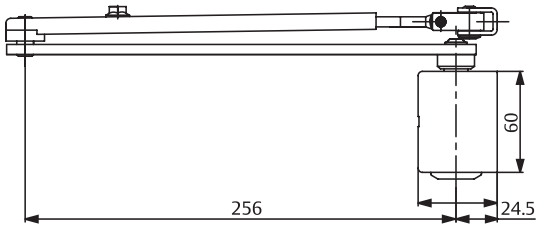

Characteristics for special model DC300DA

- Delayed closing adjustable from front
- Other features as in Model DC300

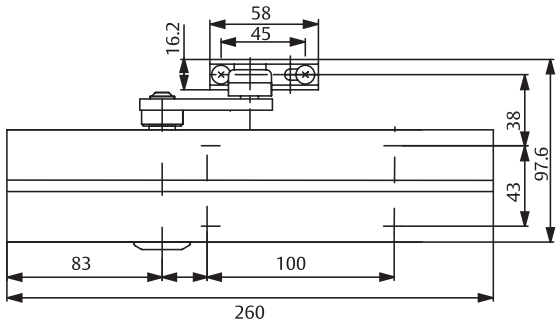

Door Closer

Installation

Standard

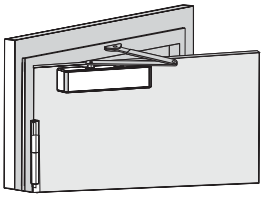

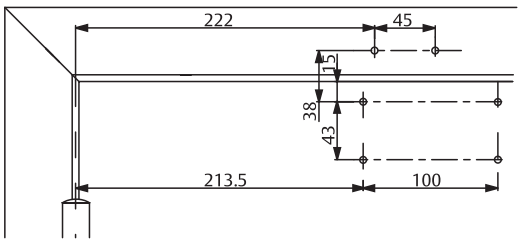

Top Jamp

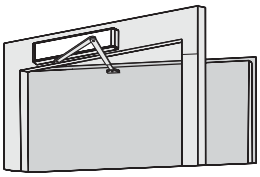

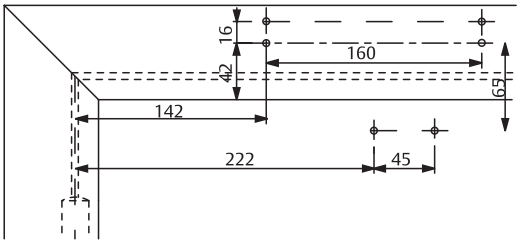

Door Closer

Accessories for DC300

Mounting plate A120

For mounting with drilling template according to EN1154 Supplement 1 (fire and smoke protection doors) and for universal use.

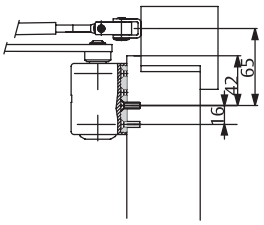

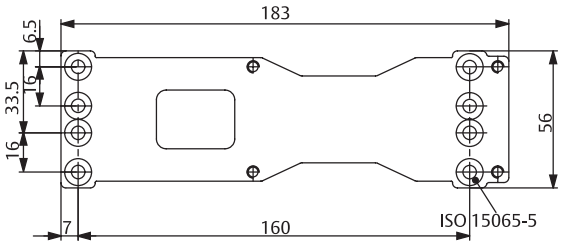

Angle bracket A123

For frame mounting in case of deep jamb, headroom reduced by 70 mm. Check suitability for use on fire and smoke protection doors.

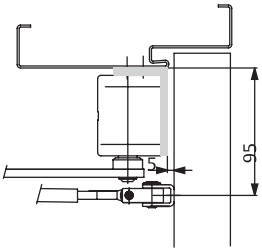

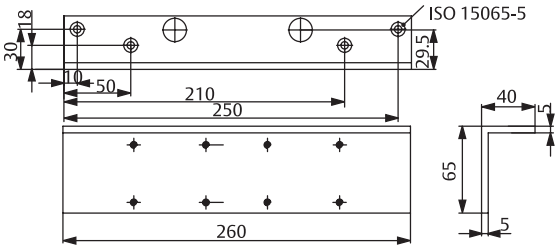

Parallel arm bracket A154

For parallel arm installation. Check suitability for use on fire and smoke protection doors.

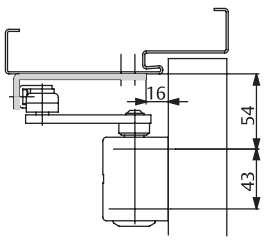

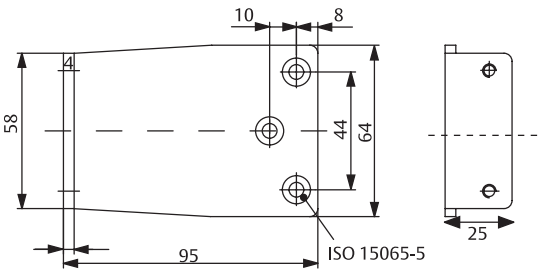

Door Closer

DC300 Tandem

ASSA ABLOY DC300 Tandem

- Rack and Pinion door closer with link arm L190
- Two door closer are interlinked for extra wide and heavy doors
- Double closing torque of DC300, EN size >7
- For single action doors up to 1800mm wide

Characteristics of DC300 Tandem

- Suitable for fire and smoke protection doors
- Tandem mounting plate A121 generally required
- Can only be used with a link arm
- Can be used for left and right-handed doors
- Link arm height-adjustable up to 14mm
- Closing speed, latching speed and back-check adjustable via front facing regulating valves
- Thermodynamic valves for consistent performance
- Adjustable closing force
- Opening angle up to 180°
- Effective back-check and latching speed range adjustable
- Large range of applications
- Standard colour: Silver

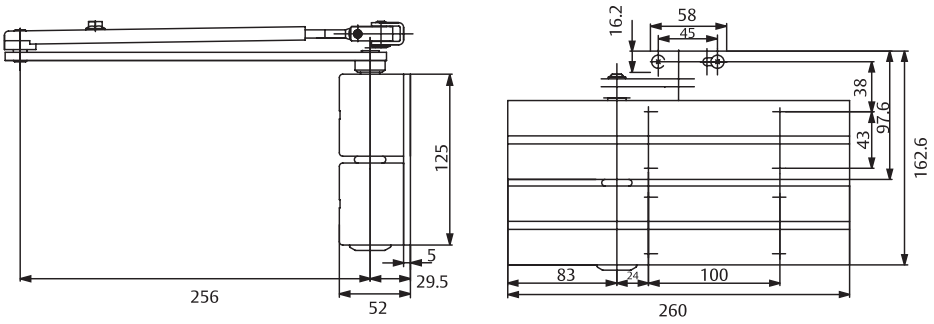

Door Closer

Mechnical details for DC300 Tandem

Technical details

Adjustable closing force	EN >7 (2 x DC300)
Door width up to	1800mm
Door swing directions	Left / right handed
Closing speed	Variable between 180°-15°
Latching speed	Variable between 15°- 0°
Back-check	Variable above 75°
Hold-open mode	e.g. for external holding magnet
Height	125 mm
Depth	52 mm
Length	260 mm
In compliance with	EN1154 (DC 300)
CE marking for building products	Yes (DC300)

Door Closer

DC500 Cam Motion

ASSA ABLOY DC500

- Door closer with Cam Motion technology and height-adjustable guide rail G195 or standard guide rail G193
- Fulfils barrier-free building requirements (DDA/ CEN TR 15894)
- Certified in compliance with EN1154, size EN1-4
- Suitable for fire and smoke protection doors
- For single action doors up to 1100mm wide
- Can be used in four installation types: Hinge and non-hinge side in standard and frame installation

CE | Abloy OY PO Box 108 80101 Joensuu,Finland | 10

1162-CPD-0464 | EN 1154:1996+A1:2002 | 3 | 8 | 4 1 | 1 | 1 | 4

F

Characteristics of DC500

- Can be used with integrated concealed mounting plate, suitable for fire and smoke protection doors
- Can be used for left and right-handed doors
- Axis continuously height adjustable up to 14mm
- Closing speed, latching speed and back-check adjustable via front facing regulating valves
- Thermodynamic valves for consistent performance
- Adjustable closing force
- Opening angle up to 170°
- Effective back-check and latching speed adjustable
- Standard colour: Silver
- Customized finishes available on request

Characteristics for guide rail G195

- Height-adjustable by 2mm for tolerance
- Concealed fastening screws
- Installation dimensions: see diagram doors

Characteristics of standard guide rail G193

- Without protective cover
- Visible fastening screws
- Installation dimensions: see diagram (dimensions in brackets)

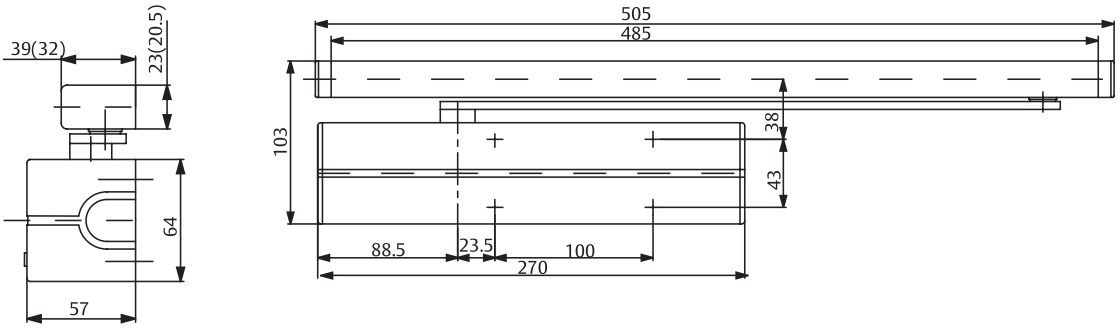

Door Closer

Technical details for DC500

Technical details

Adjustable closing force	EN1-4
Door width up to	1100mm
Fire and smoke protection	Yes
Door swing directions	Left / right handed
Standard and frame installation	Yes
Closing speed	Variable between 170°-15°
Latching speed	Variable between 15°-0°
Back-check	Variable above 75°
Opening angle hinge side	ca. 170°
Opening angle non-hinge side	ca. 102°
Height	64mm
Depth	57mm
Length	270mm
In compliance with	EN1154
CE marking for building products	Yes

Door Closer

Accessories for DC500

Mounting plate A120

For mounting with drilling template according to EN1154, Supplement 1 and for universal use

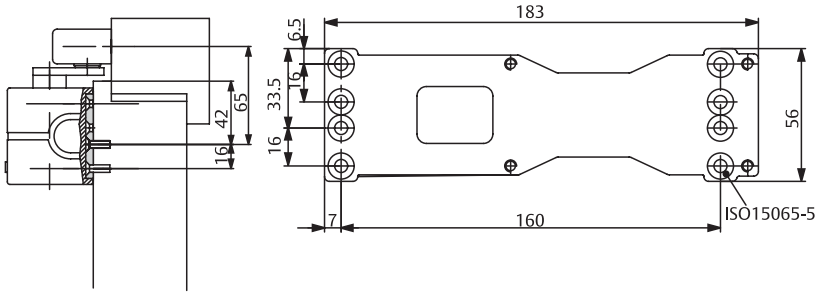

Mounting Plate A130

For guide rail G193 and G195

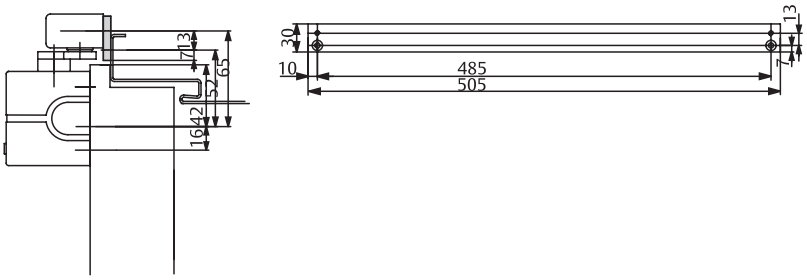

Angle Bracket A104

Only for standard guide rail G193

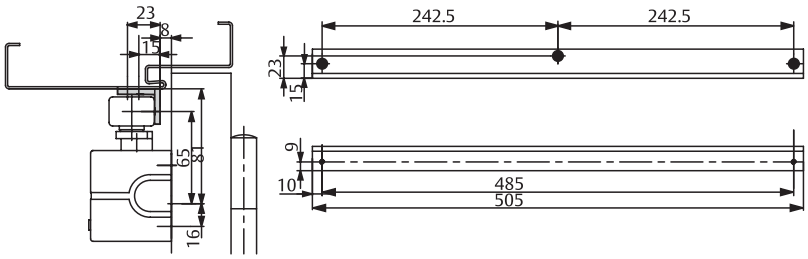

Replacement Plate A124

Replacement plate A124

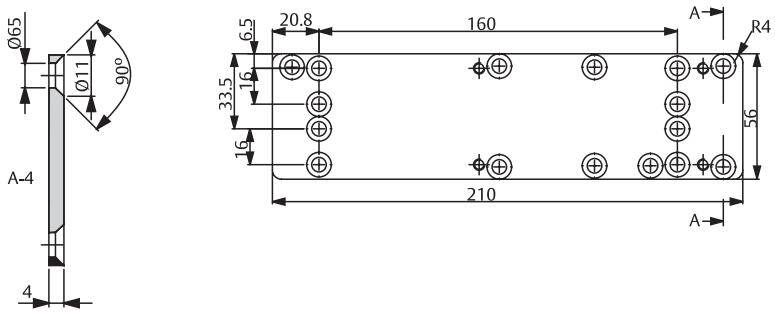

Hold-open device A152

- Mechanical hold-open device for doors which sometimes need to be secured in the open position
- Simple fitting into guide rail G193 and G195.
- Hold open angle: 130° (max.)
- Adjustable hold-open force
- Not approved for use on fire and smoke protection doors

Opening damper A153

- Helps to prevent the door and door handle from hitting a return wall
- Simple fitting into guide rail G193 and G195
- Opening damper continuously adjustable up to an opening angle of max. 130°
- Does not replace a door stop

Door Closer

DC700 Cam Motion

ASSA ABLOY DC700

- Door closer with Cam Motion technology and height-adjustable guide rail G195 or standard guide rail G193
- Fulfils barrier-free building requirements (DDA/ CEN TR 15894)
- In compliance with EN1154, size EN3-6
- Suitable for fire and smoke protection doors
- For single action doors up to 1400mm wide
- Can be used in four installation types: Hinge and non-hinge sides in standard and frame installation

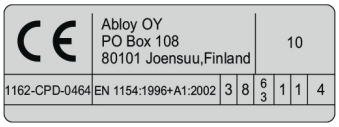

F

Characteristics of DC700

- Can be used with integrated concealed mounting plate, suitable for fire and smoke protection doors
- Can be used for left and right-handed doors
- Axis continuously height adjustable up to 14mm
- Closing speed, latching speed and back-check adjustable via front facing regulating valves
- Thermodynamic valves for consistent performance
- Adjustable closing force
- Opening angle up to 170°
- Optional delayed action
- Large range of applications
- Standard colour: Silver
- Customized finishes available on request

Characteristics of standard guide rail G193

- Without protective cover
- Visible fastening screws
- Installation dimensions: see diagram (dimensions in brackets)

Characteristics for guide rail G195

- Height-adjustable by 2mm for tolerance
- Concealed fastening screws
- Installation dimensions: see diagram doors

Characteristics of special model DC700AC

- Opening angle of 180° for standard installation on hinge side
- Other features as in Model DC700

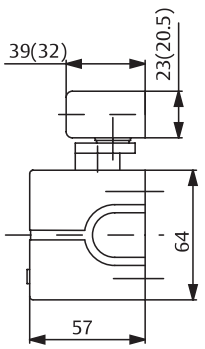

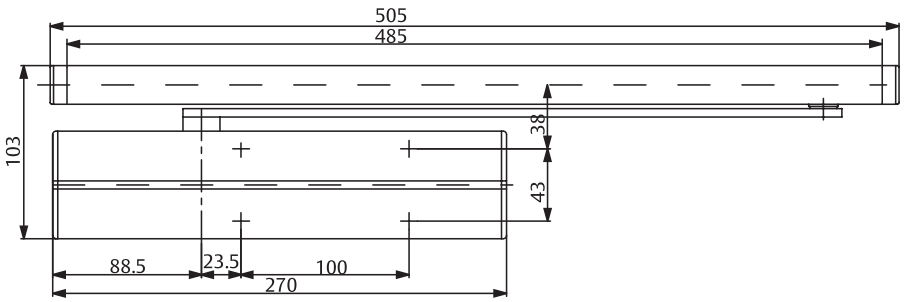

Door Closer

Technical details for DC700

Technical details:

Adjustable closing force	EN3-6
Door width up to	1400mm
Fire and smoke protection	Yes
Door swing directions	Left / right handed
Standard and frame installation	Yes
Closing speed	Variable between 170°-15°
Latching speed	Variable between 15°-0°
Back-check	Variable above 75°
Delayed closing (DC700DA)	Yes
Opening angle hinge side (DC700)	ca. 170°
Opening angle hinge side (DC700 AC)	180°
Opening angle non-hinge side (DC700 AC)	ca. 120°
Height	64mm
Depth	57mm
Length	270 mm
In compliance with	EN1154
CE marking for building products	Yes

Door Closer

Accessories for DC700

Hold-open device A152

- Mechanical hold-open device for doors which sometimes need to be secured in the open position
- Simple fitting into guide rail G193 and G195
- Hold open angle: 130° (max.)
- Adjustable hold-open force
- Not approved for use on fire and smoke protection doors

Opening damper A153

- Helps to prevent the door and door handle from hitting a return wall
- Simple fitting into guide rail G193 and G195
- Opening damper continuously adjustable up to an opening angle of max. 130°
- Does not replace a door stop

Door Closer

Accessories for DC700

Mounting plate A120

For mounting with drilling template according to EN1154 Supplement 1 and for universal use

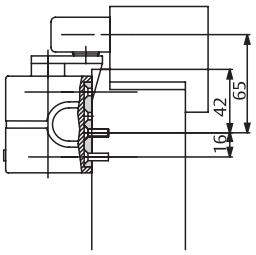

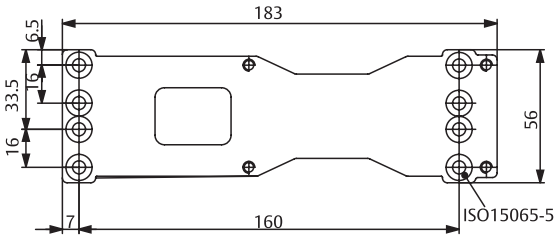

Mounting plate A130

For guide rail G193 and G195

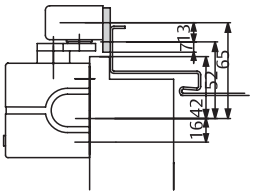

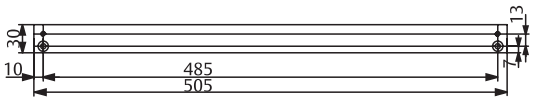

Angle Bracket A104

Only for standard guide rail G193

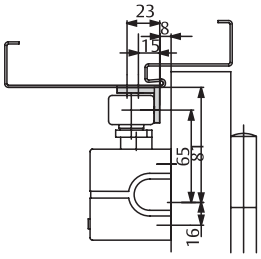

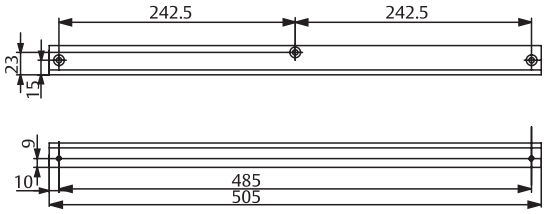

Replacement Plate A124

Replacement Plate A124

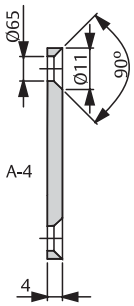

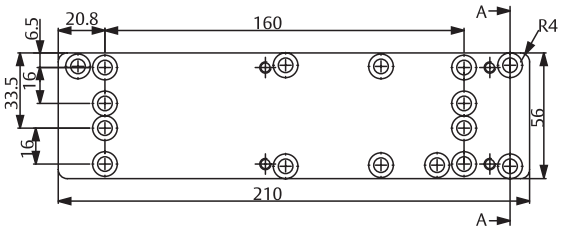

Door Closer

Installation

Standard

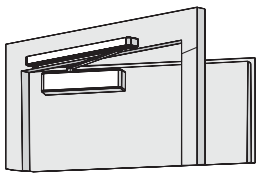

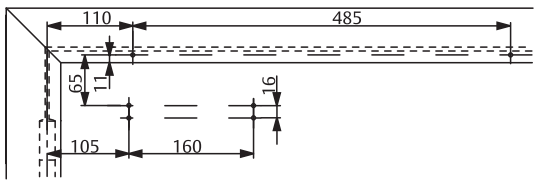

Top Jamb Mount

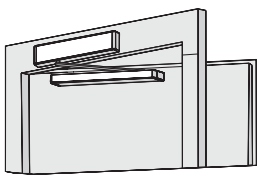

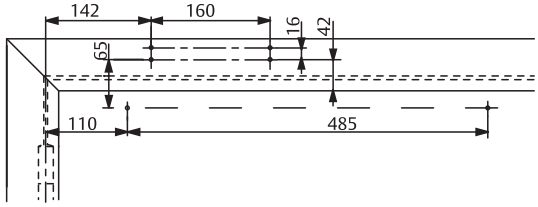

Door Closer

DC700G-FT
Cam Motion

ASSA ABLOY DC700G-FT

- ASSA ABLOY Door Closer with Cam Motion technology, extended mounting plate and integrated latch bolt lock, extended guide rail with integrated escape door strike
- Suitable for retrofitting to fire doors with guide rail door closers and fastening using drilling template according to EN1154, Supplementary Sheet 1:2003-11
- In compliance with EN 1154, size EN3-6
- Escape door strike 332, tested in compliance with the German guidelines for electrical locking systems for doors along escape routes
- For single leaf doors, doors between 850mm - 1200mm wide

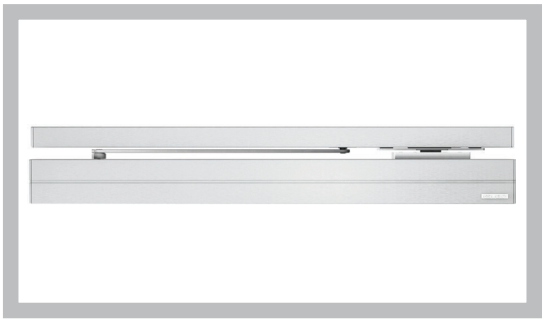

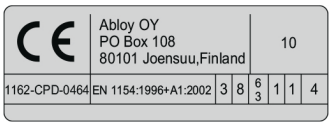

ASSA ABLOY DC700G-FT

- Integrated escape door strike 332 in extended guide rail
- Integrated latch bolt lock 807 on extended mounting plate
- With 4m connecting cable
- Flush or surface installation of wiring possible
- Suitable for fire and smoke protection doors
- Suitable for left and right-handed doors
- Standard installation on hinge side
- Adjustable closing force
- Closing speed, latching speed and back-check continuously adjustable
- Thermodynamic valves for consistent performance
- Door closer axis height continuously adjustable by 14mm
- Standard colour: Silver

Characteristics of escape door locking system

- Holding force of 2,000 N
- Latch position continuously adjustable between 12mm and 17mm
- Latch position adjustable horizontally between -3mm and +6mm
- Latch bolt lock can be adjusted vertically in 4mm increments (-4/ 0/ +4/ +8)
- Escape door strike using FaFix®, adjustable by 2mm (0.5 mm increments)

Characteristics of standard guide rail G193

- Height-adjustable by 2mm for tolerance
- Concealed fastening screws

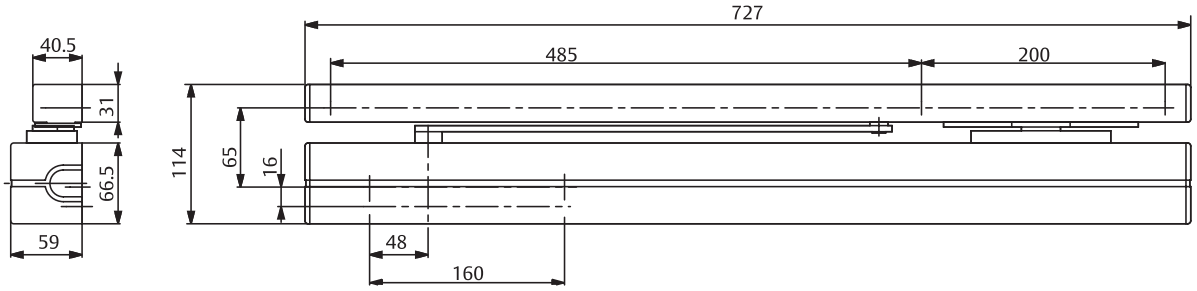

Door Closer

Technical details for DC700G-FT

Technical details:	
Adjustable closing force	EN 3-6
Door width up to	850mm - 1200mm
Fire and smoke protection	Yes
Door swing directions	Left / right handed
Standard and frame installation	Yes
Closing speed	Variable between 170°-15°
Latching speed	Variable between 15°-0°
Back-check	Variable above 75°
Opening angle hinge side	ca. 170°
In compliance with	EN1154
CE marking for building products	Yes
Mounting plate dimensions	See dimensional drawings
Dimensions of guide rail	See dimensional drawings
Escape door strike:	
Holding force	2000N
Rated voltage	12 V DC / 24 V DC
Rated current	190 mA / 12 V; 95 mA / 24 V
Rated operational voltage tolerance	+/- 10 %
Operating temperature range	-15 °C to +40 °C
Switchinge capacity - monitoring contact	24V, 1 A
Armature contact not potential-free	Yes
Free wheeling diode	Yes
In compliance with	EltVTR
Approved system in compliance with EltVTR	Escape route controller

Door Closer

Dimensional drawings for DC700G-FT

Space required on doors for standard mounting on hinge side

Left handed shown in diagram,
Right handed is the reverse.

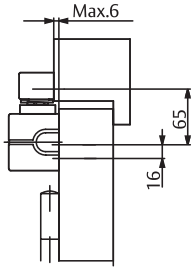

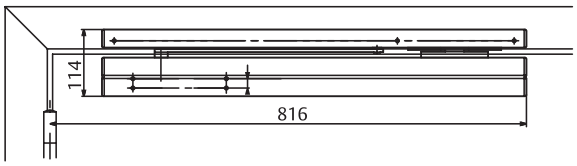

Installation dimensions in compliance with EN 1154 Supplementary Sheet 1; standard hinge-side mounting

Left handed shown in diagram,
Right handed is the reverse.

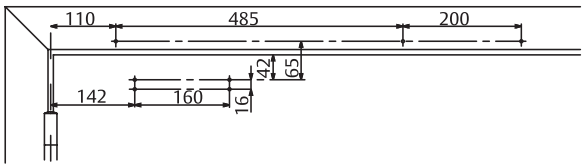

Notice

The positions of the locking components on the guide rail and mounting plate are designed in such a way that escape door strikes and latch bolt are correctly aligned when installed in a flush position (flush-fitted doors). Adjustment option on electric strike (FaFix®) of +/- 1 mm and latch bolt lock of +6/-3 mm mean that smaller differences in measurements can be compensated for.

In case of doors with an overlapping door leaf (narrow or wide rebate), the following spacer plates must be used to ensure that the guide rail and mounting plate are in a flush position when on top of one another.

Door Closer

Accessories for DC700G-FT

Spacer Plate DCFA01

For shimming guide rails over ASSA ABLOY drilling pattern. For use on narrow-rebate doors with a max. door leaf overlap of 8mm.

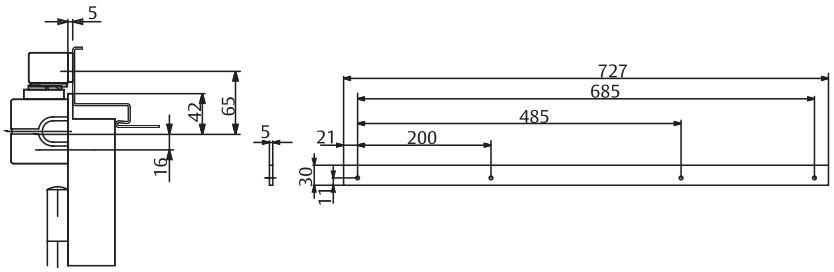

Spacer Plate DCFA02

For shimming guide rails over ASSA ABLOY drilling pattern. For use on narrow-rebate doors with a max. door leaf overlap of 18mm.

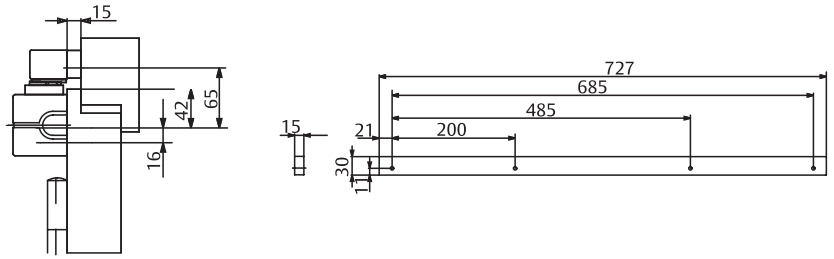

Replacement Plate DCFA03

For mounting guide rail over existing drill holes from other manufacturers, for flush-fit doors and narrow rebate doors with door leaf overlap up to 8mm.

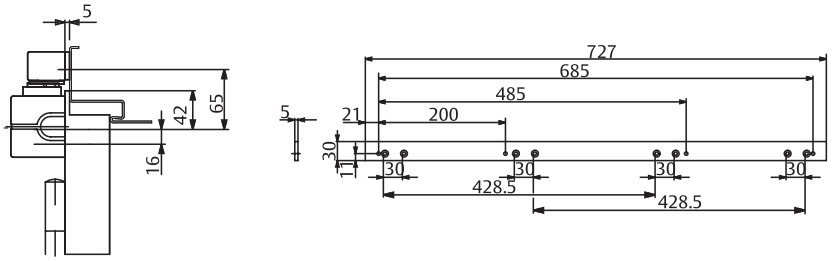

Replacement Plate DCFA04

For mounting guide rail over existing drill holes from other manufacturers. For flush-fit doors and narrow rebate doors with door leaf overlap up to 18mm

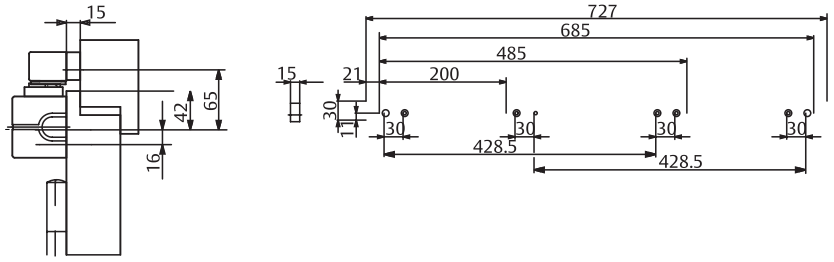

Door Closer - Concealed

ASSA ABLOY

Door Closer

DC703

ASSA ABLOY DC703

- Concealed door closer with Rack and Pinion technology
- CE certified with EN1154, size EN3 and EN1634
- For single action doors up to 950mm
- Opening angle up to 120˚

Characteristics of DC703

- Single action, with easy installation (Non-directional body to avoid any installation and adjustment mistakes)
- Suitable for wooden, metal and narrow profile aluminium door
- Powder-Coated finish, provide better reliability and better appearance
- Suitable for interior and external door application
- Optional 90˚ HO
- Standard colour: Silver

Door Closer

Technical details for DC703

Technical details

Closing force	Size EN3
Door width up to	950mm
Fire and smoke protection	Yes
Door swing directions	Non-handed
Closing speed	Variable between 120°-15°
Latching speed	Variable between 15°-0°
Opening Angle	120˚
Height	54mm
Depth	32mm
Length	215mm
In compliance with	EN1154 & EN1634
With Hold-open function	**DC703 HO**
Without Hold-open function	**DC703**

Door Closer

DC800

ASSA ABLOY DC800

- Concealed door closer with Cam Motion technology
- In compliance with EN1154, size 3 and 4
- For single action doors up to 1100mm
- Compact design and slide channel

Characteristics of DC800

- Can be used for left and right-handed doors
- Maximum door opening angle 115°
- Closing and latching speed adjustable via regulating valves
- Thermodynamic valves for consistent performance
- Optional hold-open unit
- Standard colour: Silver

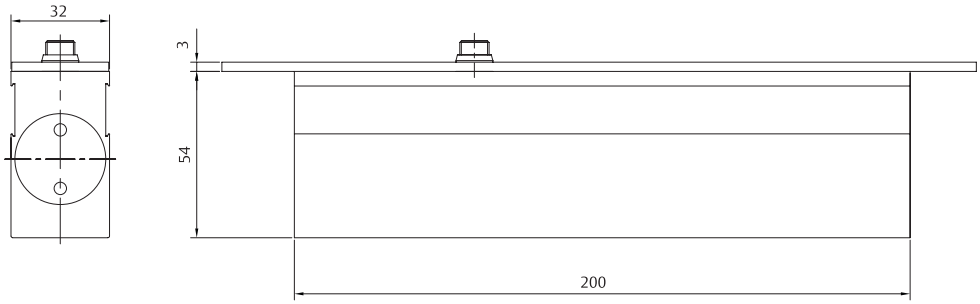

Door Closer

Technical details for DC800

Technical details

Closing force	Size 3 (DC803)	Size 4 (DC804)
Door width up to	950mm1	100mm
Fire and smoke protection	Yes	No
Door swing directions	Non-handed	
Closing speed	Variable between 115°-15°	
Latching speed	Variable between 15°-0°	
Backcheck	No	
Height	54mm	
Depth	32mm	
Length	200mm	
In compliance with	EN 1154	
With Hold-open function	**DC803 HO**	**DC804 HO**
Without Hold-open function	**DC803**	**DC804**

Door Closer

DC901

ASSA ABLOY DC901

- Concealed door closer with CAM-Motion technology
- Compact design and light weight for easy installation
- CE certified with EN1154, size EN2-4 and EN1634
- For single action doors up to 1100mm
- Opening angle up to 120˚

Characteristics of DC901

- Optional back-check and delayed action functions
- Powder-Coated finish, provide better reliability and better appearance
- Suitable for interior and exterior door application
- Power adjustable EN 2-4
- Optional 90˚ HO
- Standard colour: Silver

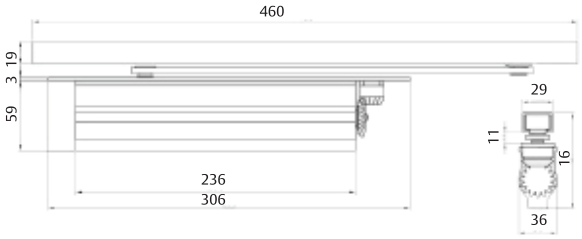

Door Closer

Technical details for DC901

Technical details

Closing force	Size EN2-4
Door width up to	1100mm
Fire and smoke protection	Yes
Door swing directions	Non-handed
Closing speed	Variable between 120°-15°
Latching speed	Variable between 15°-0°
Opening Angle	120˚
Height	59mm
Depth	36mm
Length	236mm
In compliance with	EN1154 & EN1634
With Hold-open function	**DC901 HO**
Without Hold-open function	**DC901**

Door Closer

Dimensional drawings for DC901

Required space on doors

Left handed shown in diagram,
Right handed is the reverse.

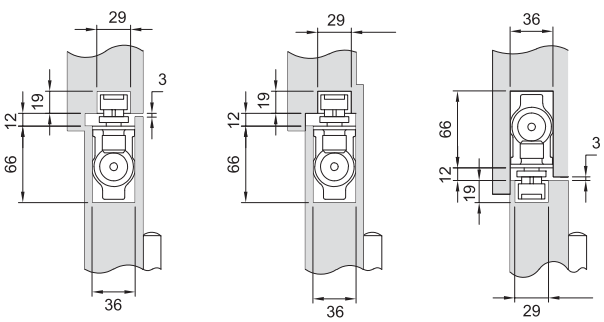

Door Closer

DC902

ASSA ABLOY DC902

- Concealed door closer with CAM-Motion technology
- Compact design and light weight for easy installation
- CE certified with EN 1154, size 2-5 and EN 1634
- For single action doors up to 1250mm
- Opening angle up to 115°

Characteristics of DC902

- Optional back-check and delayed action function
- Powder-Coated finish, provide better reliability and better appreance
- Suitable for interior and exterior door application
- Power adjustable EN 2-5
- Optional 90° HO

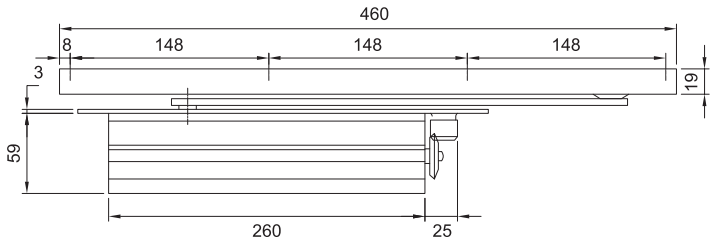

Door Closer

Technical details for DC902

Technical details:

Closing force	Size EN 2-5
Door width up to	1250mm
Fire and smoke protection	Yes
Door swing directions	Non-handed
Closing speed	Variable between 120°-15°
Latching speed	Variable between 15°-0°
Opening Angle	115°
Height	59mm
Depth	37mm
Length	260mm
In compliance with	EN1154 & EN1634
With Hold-open function	**DC902 HO**
Without Hold-open function	**DC902**

Door Closer

Dimensional drawings for DC902

Required space on doors

Left handed shown in diagram,
Right handed is the reverse.

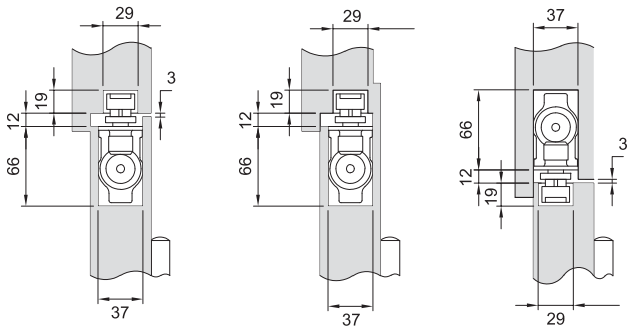

Door Closer - Concealed

ASSA ABLOY

Door Closer

DC002 / DC003
DC004 / DC005

ASSA ABLOY DC002 / DC003 / DC004 / DC005

- Concealed door closer.
- Compact design and light weight for easy installation.
- CE certified with EN 1154, size 2 / 3 / 4 / 5.
- For single action doors up to 1250mm.
- Opening angle up to 115°

Character of DC002 / DC003 / DC004 / DC005

- Optional back-check and delayed action function
- Powder-Coated finish, provide better reliability and better appreance
- Suitable for interior and exterior door application
- Power fixed EN 2 / 3 / 4 / 5
- Optional 90° HO
  Standard colour: Silver

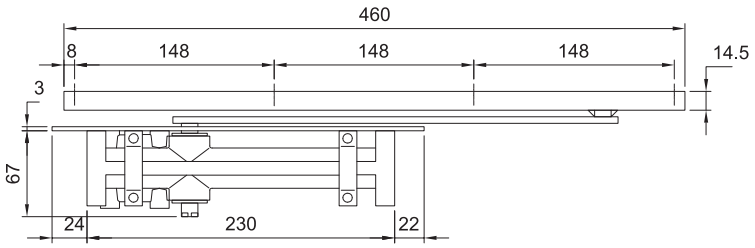

Door Closer

Technical details

Technical details

Closing force	EN 2 / 3 / 4 / 5
Door width up to	950 - 1250mm
Fire and smoke protection	Yes
Door swing directions	Non-handed
Closing speed	Variable between 120°-15°
Latching speed	Variable between 15°-0°
Opening Angle	120°
With Hold-open function	**DC002 HO / DC003 HO / DC004 HO / DC005 HO**
Without Hold-open function	**DC002N / DC003N / DC004N / DC005N**

Door Closer

Dimensional drawings

Required space on doors

Left handed shown in diagram,
Right handed is the reverse.

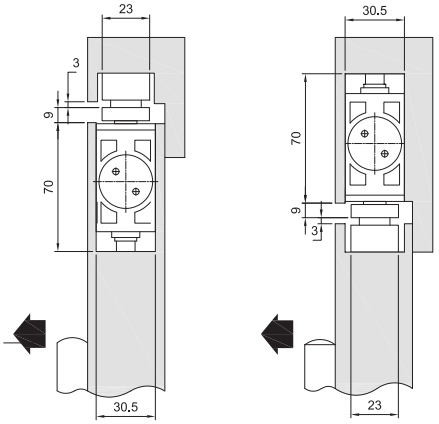

Door Closer

DC860 Cam Motion

ASSA ABLOY DC860

- Concealed door closer with Cam Motion technology and small standard concealed guide rail G892 or standard concealed guide rail G893
- Fulfils barrier-free building requirements (DDA/ CEN TR 15894)
- Certified in compliance with EN1154, size EN1-5
- Suitable for fire and smoke protection doors
- For single action doors up to 1250mm wide

CE Abloy Oy PO Box 108 80101 Joensuu,Finland 11

0432-CPD-0047 EN1154:1996+A1:2002 3 8 5/1 1 1 2

F

Characteristics of DC860

- Can be used for left and right-handed doors
- Closing speed, latching speed and back-check adjustable via front facing regulating valves
- Built-in back-check
- Thermodynamic valves for consistent performance.
- Opening angle up to 120°
- Large range of applications
- Versions with 4mm and 8mm spindle extensions
- Standard colour: Silver
- Customized finishes available on request

Characteristics of standard guide rail G892

- Small size guide rail
- For standard applications
- Available with mechanical hold-open device or opening damper
- Installation dimensions: see diagram

Characteristics for guide rail G893

- Guide rail suitable for equipping with hold-open device and back-check
- Installation dimensions: see diagram (dimensions in brackets)

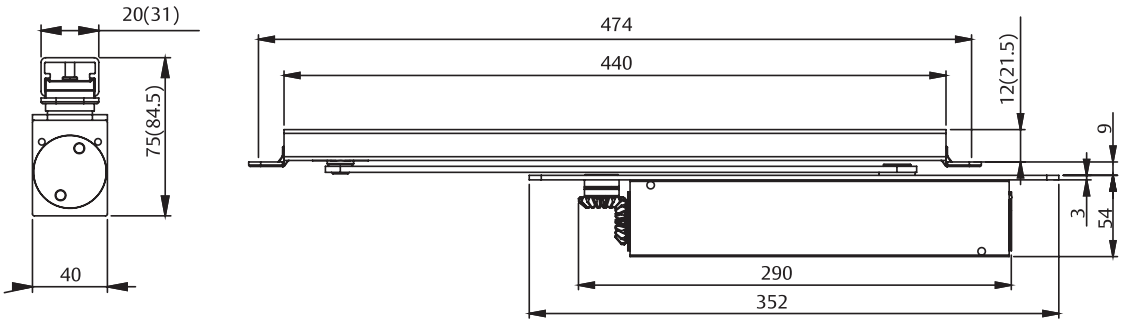

Door Closer

Technical details for DC860

Technical details:

Adjustable closing force	EN1-5
Door width up to	1250mm
Fire and smoke protection	Yes
Door swing directions	Left / right handed
Standard and frame installation	Yes
Closing speed	Variable between 120°-7°
Latching speed	Variable between 7°-0°
Opening angle	ca. 120°
Height	54mm
Depth	40mm
Length	290 mm
In compliance with	EN1154
CE marking for building products	Yes

Door Closer

Dimensional drawings for DC860

Installation dimensions for direct standard mounting on hinge side:
Right-handed door shown in diagram, Left handed door is the reverse.

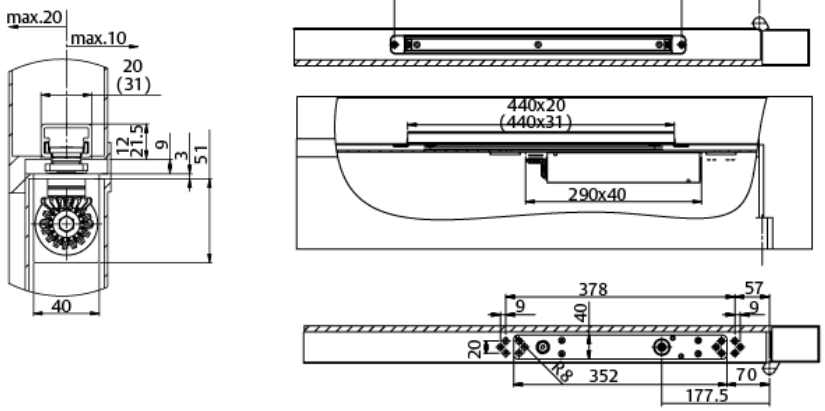

Right-handed door shown in diagram, Left handed door is the reverse.

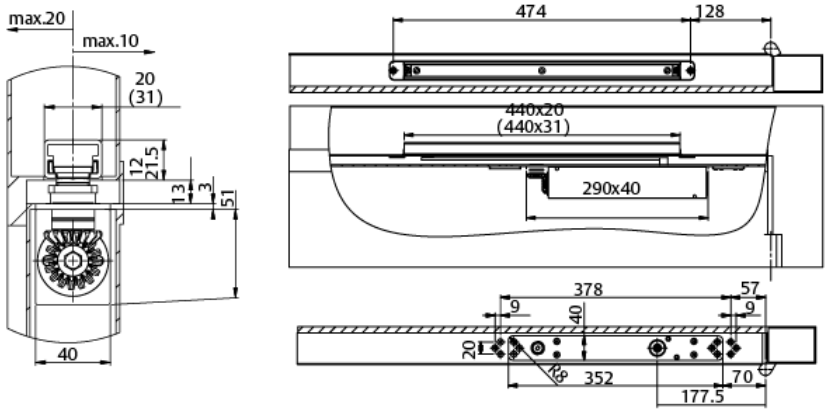

Installation dimensions with 8mm axis extension:
Right-handed door shown in diagram, Left handed door is the reverse.

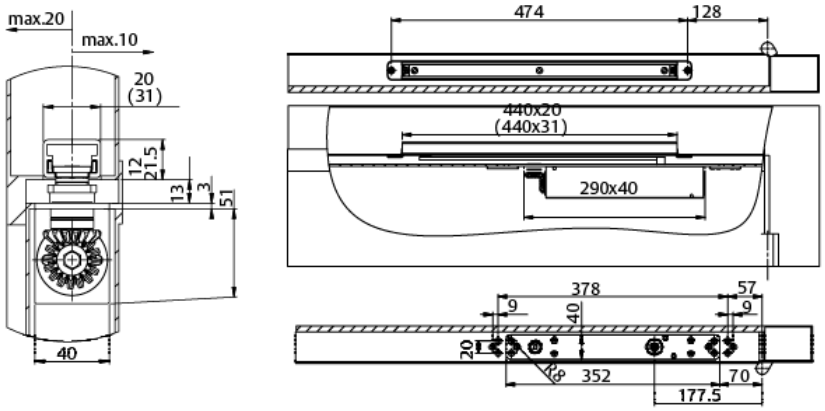

Door Closer

Accessories for DC860

Hold-open device A152

- Mechanical hold-open device for doors which sometimes need to be secured in the open position
- Simple fitting into guide rail G193 and G195
- Hold open angle max. 130°
- Adjustable hold-open force
- Not approved for use on fire and smoke protection doors

Hold-open device A156

- For guide rail G892

Opening damper A153

- Helps to prevent the door and door handle from hitting a return wall
- Simple fitting into guide rail G893, does not replace a door stop
- Adjustable up to an opening angle of 120°

Opening damper A157

- Helps to prevent the door and door handle from hitting a return wall
- Simple fitting into guide rail G892, does not replace a door stop
- Adjustable up to an opening angle of 120°

Fixing plate A162

- Mounting plate set for metal doors

Door Closer

DC860 with G880 Cam Motion

ASSA ABLOY DC860 with G880

- Concealed door closer with Cam-Motion technology and guide rail with electromechanical hold open device for single leaf doors
- Guide rail is in compliance with EN1155, Size EN3-6
- Fulfil barrier-free building requirements (DDA/ CEN TR 15894)
- Hold-open angle continuously adjustable between 80°- 120°
- Suitable for fire and smoke protection doors
- For single action doors up to 1250mm wide

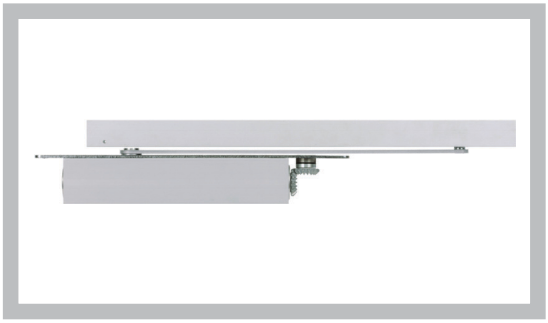

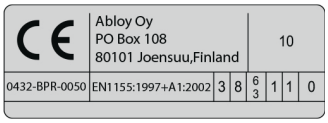

Characteristics of DC860 with G880

- Concealed electromechanical hold-open device
- Continuously adjustable holding force
- Hold-open angle continuously adjustable between 80°- 120°
- Can be used for left and right-handed doors
- Closing speed and latching speed adjustable from top via regulating valves
- Built-in back-check
- Thermodynamic valves for consistent performance
- Large range of applications
- Versions with 4mm and 8mm spindle extensions
- Standard colour: Silver
- Customized finishes available on request

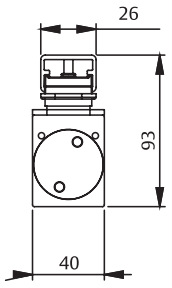

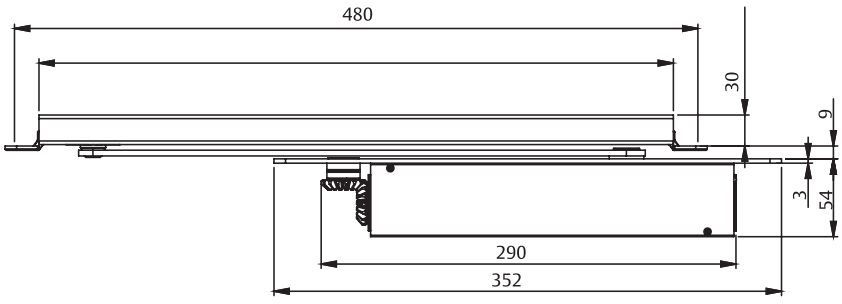

Door Closer

Technical details for DC860 with G880

Technical details

Supply voltage	24 V DC
Rated current consumption at 24 V	ca. 60 mA
Continuous duty	100% ED
Hold-open angle (continuously adjustable)	80° - 120°
Height	30mm
Depth	26mm
Length	493mm
Fire and smoke protection	Yes
In compliance with	EN1155
CE marking for building products	Yes
Facts for door closer	Yes, see DC860

Door Closer:

Dimensional drawings for DC860 with G880

Installation dimensions for direct standard mounting on Hinge side:

Right-handed door shown in diagram, Left handed door is the reverse.

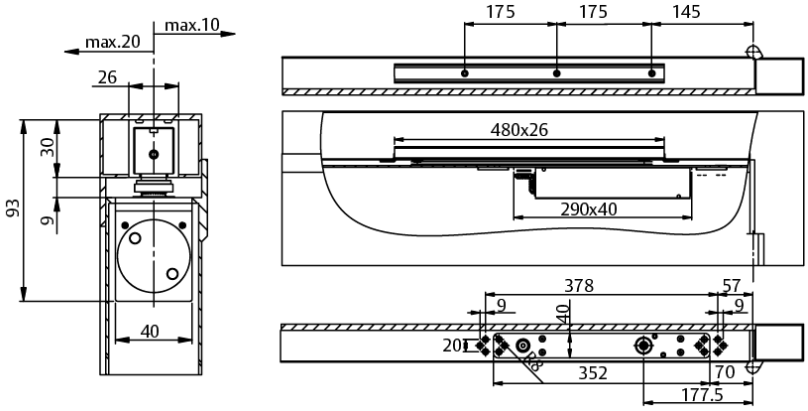

Installation dimensions with 4mm axis extension:

Right-handed door shown in diagram, Left handed door is the reverse.

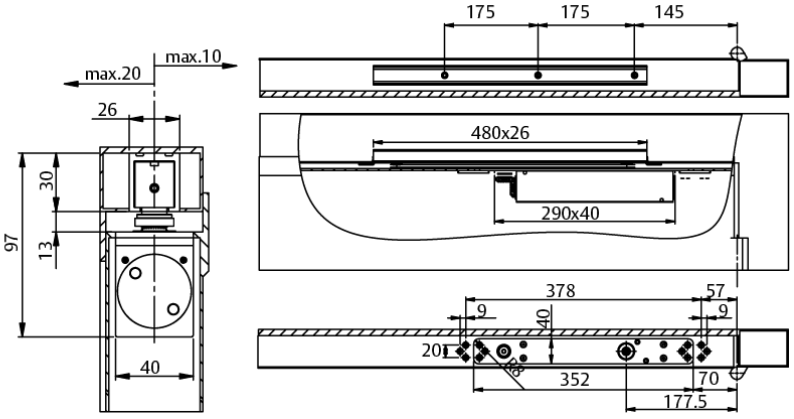

Installation dimensions with 8mm axis extension:

Right-handed door shown in diagram, Left handed door is the reverse.

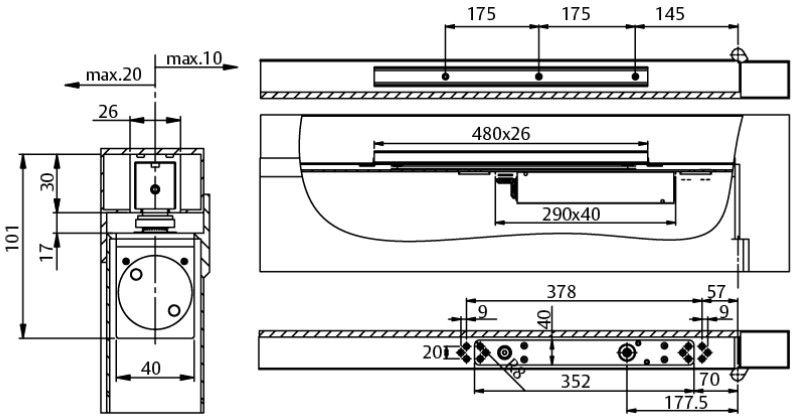

Guide rail

G461, G462, G464

Technical details

- Certified for size EN3-6
- Hinge distance 1250mm to 2800mm
- Hinge and none hinge side mounting
- Standard colours (silver, white, brown, black, customized)

Accessories for G461, G462, G464

- Mounting plate
- Angle bracket
- Hook arm, carry bar
- Smoke protector detector
- Flush or surface mounted release button

Information G461

- Integrated coordinator

Information G462

- Like G461
- Two el.-mech. hold open devices

Information G464

- Like G461
- One el.-mech. hold open devices

Guide rail

G881, G882, G884

Technical details

- Certified for size EN3-6
- Hinge distance 1350mm to 2800mm
- Silver EV1, customized

Accessories for G461, G462, G464

- Carry bar
- Power supply
- Smoke protection detector
- Flush or surface mounted release button

Information G881

- Integrated coordinator

Information G882

- Like G881
- Two el.-mech. hold open devices

Information G884

- Like G881
- One el.-mech. hold open devices

HIP

Floor Springs

ASSA ABLOY

Experience a safer
and more open world

Features & Benefits

Floor Spring

Features:
- Non-handed system
- Up to 1 million cycles tested
- Fire rated
- Concealed mounting
- Cam Motion system

Benefits:
- Versatile usage
- High durability
- Suitable for fire doors
- Modern & compact design
- Energy conservation

Standard & Certification

EN1154
CE Mark

Technical details:
- Various power sizes
- Suitable for wood, glass, metal and fire rated doors
- Available finishes - SSS, PSS and customized finishes available on request

Functions:
- Back-check
- Hold-open
- Controlled closing speed
- Thermodynamic valves
- Independent hydraulic circuit

This new range of product is based on a new modular concept and a common design, under a unique platform for both premium and standard floor spring.

Finish:
- Polished Stainless Steel
- Satin Stainless Steel
- Polished Brass
- Black Matt

Features & Benefits

Key Features

Cam Motion® Technology:

This technology enables floor springs to comply with CEN TR 15894 requirements and ensures that the force which a user needs to apply to open the door up to 60° must be reduced by 40%.

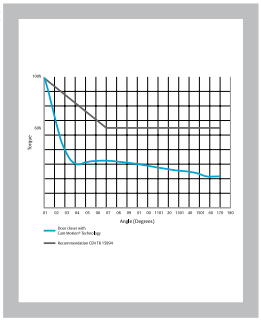

Thermodynamic valves:

The thermodynamic valves enable the consistent performance of a floor spring in case of temperature fluctuation.

1 Million Cycles:

The required durability according to EN1154 is 5,00,000 test cycles. ASSA ABLOY floor springs are tested to 1,000,000 cycles for improved durability and performance.

Metal eyelet:

Cover plate and eyelet are made from Satinless Steel and in the same color design for a consistent aesthetic appeal. Additionally, the eyelet cannot be removed after it is installed.

Floor Spring

Overview of functions

Independent hydraulic circuits:

The hydraulic circuits in floor spring, for the closing and latching speed adjustment, enable to regulate (slow down or speed up) the closing and latching speed precisely and independently from each other by thermodynamic valves.

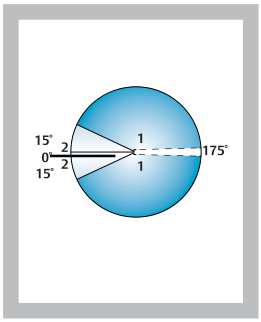

Back-check:

Integrated back-check function hydraulically slows down the opening motion from an opening angle of about 75°.

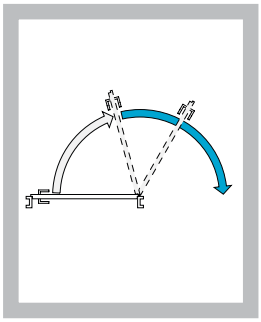

	DC475	DC477	DC420	DC460	DC450	AF-200F	AF224P	AF503	AF600
EN Size	EN3 - EN6	EN2 - EN4	EN3/ EN4	EN2/EN3/EN4	EN3/EN	EN	EN2-4	Size 3	Size 3/4
Recommended door max. width (mm)	950 - 1400	850 - 1100	950/1100	850/950/1100	950/1100	950	850-1100	950	950-1100
Max. weight of door	<300kg	<170kg	<100kg	<120kg	<120kg	<120kg	<150kg	<105kg	<150kg
Applications	Heavy doors, high traffic doors, exterior doors	Recommended exterior & interior doors	Recommended for glass doors	Recommended for light-duty interior doors	Recommended for light-duty interior doors	Recommended for light-duty interior doors	Recommended exterior & interior doors	Recommended exterior & interior doors	Recommended exterior & interior doors
Opening angle (incl. hold-open)	175°	150° 180° 150°	175°	130° 130°	130° 130°	120° 180° 120°	145° 180° 145°	130° 130°	130° 130°
Back-check	✓	✓	–	–	–	–	–	–	–
Single-action	✓	✓	✓	✓	✓	✓	✓	✓	✓
Double-action	✓	✓	✓	✓	✓	✓	✓	✓	✓
Fire doors (CE)	✓	✓	✓	✓	(in preparation)	✓	✓	–	–
Hinge distance (mm)	36 - 42	54 - 57	36 - 46	48 - 54	49 - 54	49 - 54	49 - 54	45 - 50	48 - 56
Dimensions (mm) L x W x H	345 x 78 x 82	277 x 110 x 70	306 x 82 x 47	308 x 108 x 40	277 x 108 x 40	319 x 108 x 40.5	319 x 82 x 49.5	274 x 97x 40	308 x 108x 40

Floor Springs - DC475

Floor Spring with Cam Motion® technology and adjustable closing force for large or very heavy doors

ASSA ABLOY DC475:

- Floor spring with adjustable closing force for large and very heavy doors
- In compliance with EN1154 size EN3-6
- 1,000,000 cycles tested
- Suitable for fire and smoke protection doors
- For single and double action door up to 300kg

Characteristics of DC475:

- Closing from 175° in both door swing directions with hydraulic control from 175°
- Two thermodynamic valves for consistent performance
- Adjustable door speed and latching speed through top regulating valves
- Back-check
- Cast Iron body
- Adjustments in all directions within the cement box
- Cement box is hot zinc plated
- Cover plates and eyelets made in polished or Satin Satinless Steel and Polished Brass
- Interchangeable spindle from 0 to 30mm
- Available without hold-open or with hold-open angle 90° and 105°

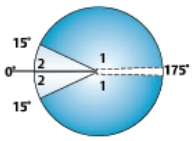

Speed adjustment:

1 variable closing speed 175° - 15°

2 variable latching speed 15° - 0°

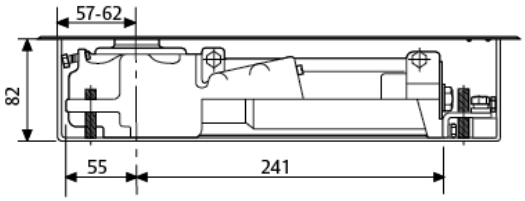

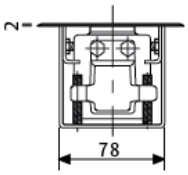

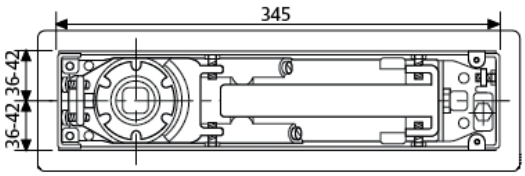

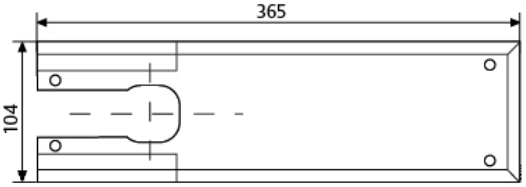

Floor Springs - DC475

ASSA ABLOY

Floor Spring

DC475

Technical details:

Adjustable closing force	EN3-6
Door width up to	1400mm
Door weight up to	300 kg
Max. opening angle	175°
Closing speed	Variable between 175°-15°
Latching speed	Variable between15°- 0°
Back-check	Mechanical
Weight	7.3kg
Height	82mm
Length	345mm
Width	78mm
Body adjustment within cement box	Vertical 9mm, side 6mm, front 5mm, angular 2°
DIN-direction	Left/Right-handed doors or double action
Hold-open mode	90°/105°/Non hold-open
In compliance with	EN1154
CE Marking for building products	Yes
Fire and smoke protection	Yes

Our service for you

Here you can see the individual advantages of our floor spring models for your respective fields of business.

The advantages at a glance

Customer segment	*Advantages*
Project planners	• Extensive range of uses: Fire and smoke protection doors as well as standard doors • Hold-open at 90°, 105° and non hold-open • Variety of available spindles: squared Italian, rectangular German • Architectural finishes: Cover plates and eyelets in Polished Stainless Steel, Satin Stainless Steel, Polished Brass
Builders	• Univeral for Left / Right handed and double-action doors • Overpressure relief valve to protect unit against abuse • Large range of adjustment within cement box to solve possible alignment problems on the site without taking down the door
	• Reduce inventory costs due to modular product range • One single product suitable for a large variety of mounting position • Complementary accessories available for the whole product range
User	• Adjustable operating force to meet door construction requirements and user needs • Easier door opening and improved accessibility due to Cam Motion® technology • Back-check feature offers optimum protection for doors and walls

Floor Spring

Dimensional drawings for DC475

Double-action door mouting

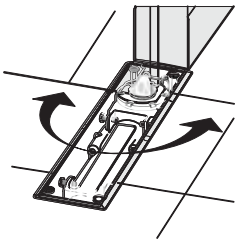

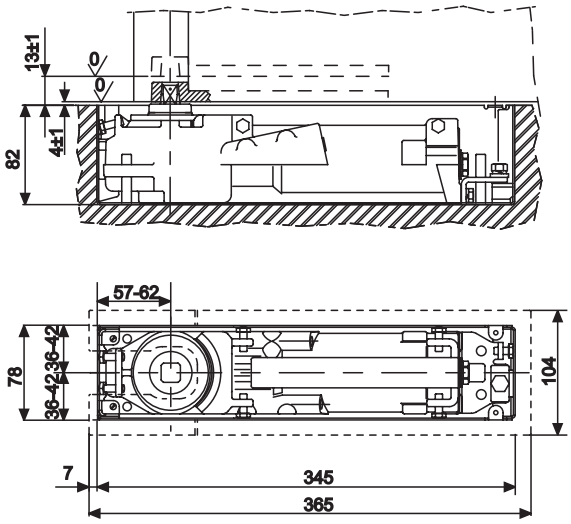

Right-handed door mouting

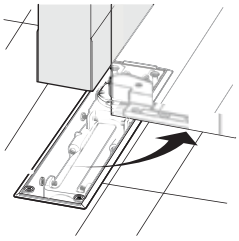

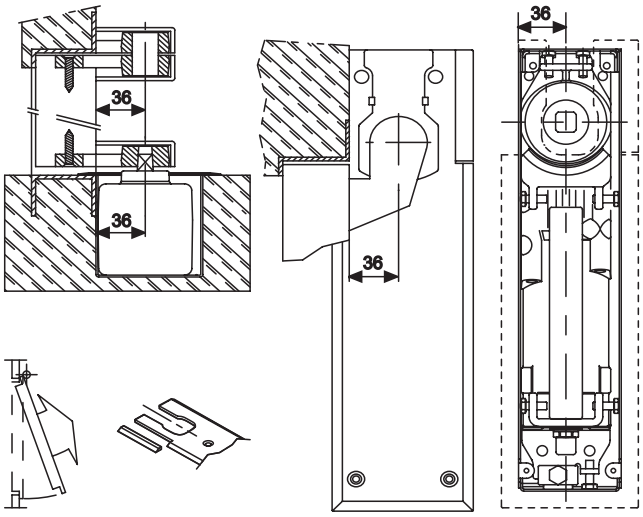

Left-handed door mounting

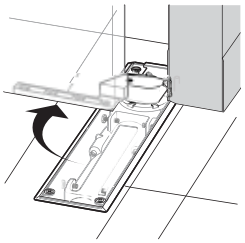

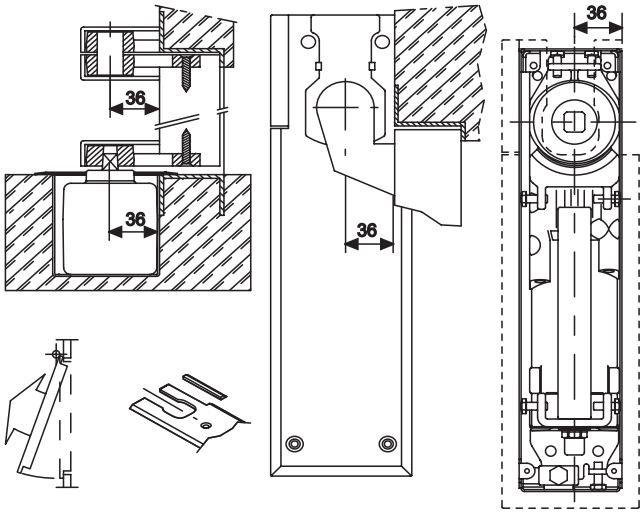

Floor Spring

Accessories for DC475

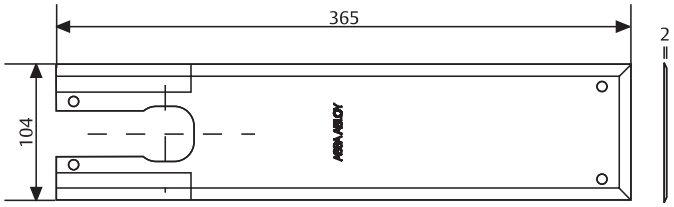

AC269

Available in Satin Satinless Steel, Polished Satinless Steel and Polished Brass.

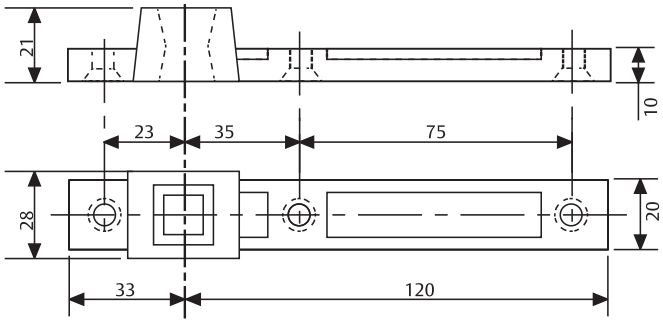

AC115

Reversible bottom arm in steel for double action doors, socket for Italian squared spindle.

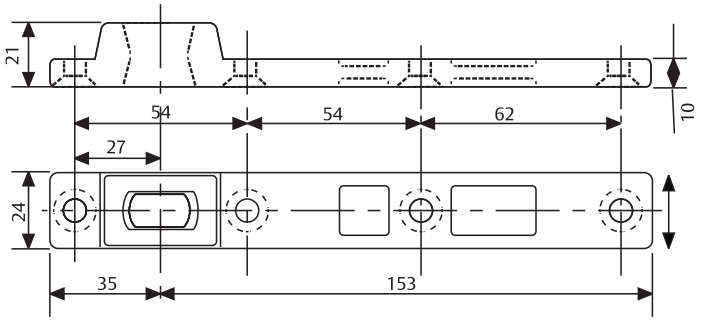

AC393

Reversible bottom arm in steel for double action doors, socket for German rectangular spindle.

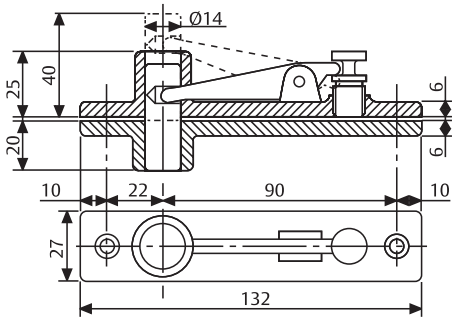

AC8

Double action top pivot

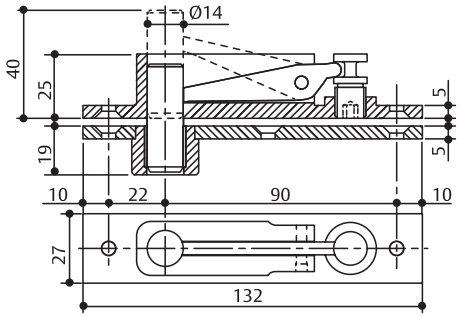

AC375

Double action top pivot in full steel with self lubricating bushing

Floor Spring

Accessories for DC475

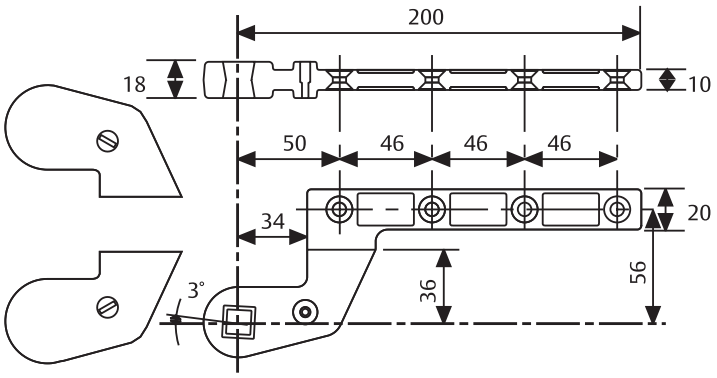

AC583
Right and left bottom arm in steel for single -action doors, 36mm offset. Socket for Italian squared spindle, Silver or Black painted.

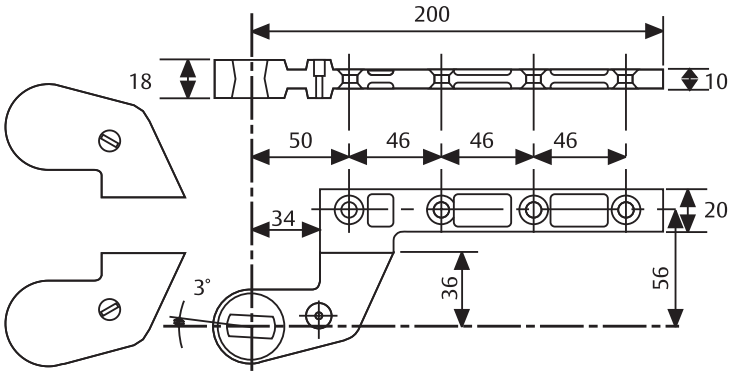

AC392
Right and left bottom arm in steel for single action doors, 36 mm offset, socket for German rectangular spindle, Silver and Black painted ABS covers.

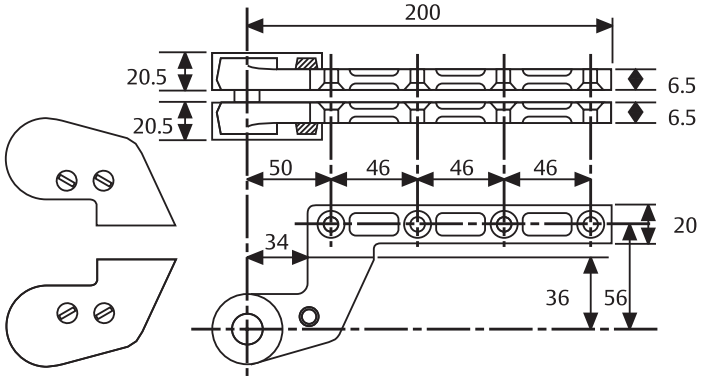

AC384
Right and left top arm in full steel, 36mm offset with Silver or Black painted ABS cover.

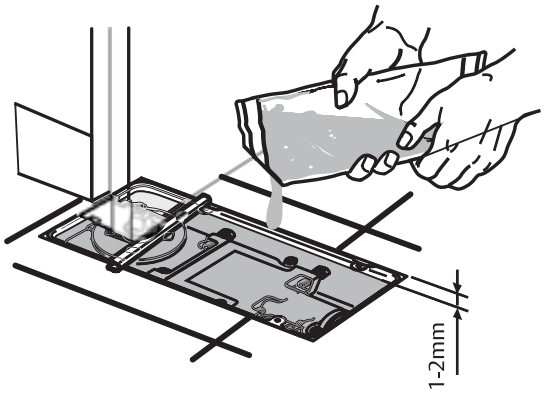

AC612
Sealing compound for floor springs

ASSA ABLOY

Floor Spring

Accessories and order placement information for DC475

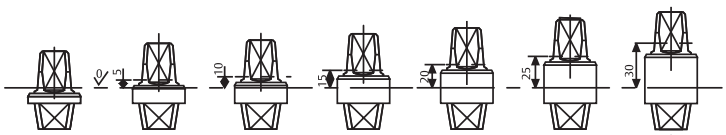

AC340A	C341	AC342A	C343A	C344A	C345A	C346
AC360A	C361A	C362A	C363	AC364A	C365A	C366

IT
GE

Detachable spindles

Italian spindle - square shape (left image)
German spindle - flat-conical shape (right image)

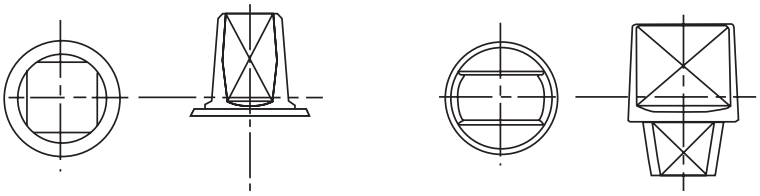

You can find the complete specifications on the internet at: www.assaabloy.com, under "Service" in the support section.

Specifications for DC475

ASSA ABLOY Floor spring DC475 featuring CAM Motion® technology is in compliance with EN1154

- 1,000,000 cycles tested
- Closing power variable adjustable, size EN 3-6, for door up to 1400mm wide
- Closing speed, latching speed adjustable through top regulating valves
- CE approved
- 9mm height adjustable within cement box
- Suitable for Left / Right handed double-action dooors

Accessories

- AC115 - Reversible bottom arm Italian spindle
- AC393 - Reversible bottom arm German spindle
- AC8 - Double action top pivot
- AC375 - Double action top pivot
- AC583 - Right and left bottom arm. Socket for Italian square spindle
- AC392 - Right & left bottom arm. Socket for German rectangular spindle
- AC384 - Top pivot for left or right doors
- AC612 - Sealing compound for floor springs
- AC269 - Cover plate for DC475

Colour

- Polished Stainless Steel
- Satin Stainless Steel
- Polished Brass

Floor Springs - DC477

ASSA ABLOY

Floor Spring with Cam Motion® technology and adjustable closing force for heavy doors

ASSA ABLOY DC477

- Floor spring with adjustable closing force for large and heavy doors
- In compliance with EN1154, size EN2-4
- 1,000,000 cycles tested
- Suitable for fire and smoke protection doors
- For single and double action doors up to 170kg

Characteristics of DC477

- From 175° in both door swing directions with hydraulic control from 150°
- Two thermodynamic valves for consistent performance
- Adjustable door speed and latching speed through top regulating valves
- Back-check
- Cast Iron body
- Adjustments in all directions within the cement box
- Cement box is hot zinc plated
- Cover plates and eyelets made in polished or Satin Satinless Steel and Polished Brass
- Interchangeable spindle from 0 to 30mm
- Available without hold-open or with hold-open angle 90°, 105°

MAB

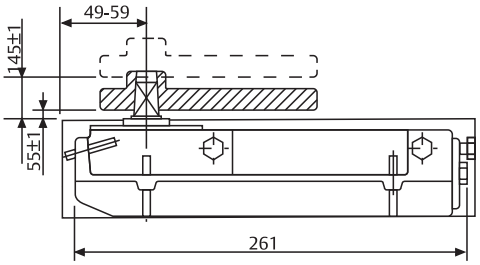

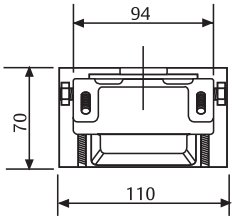

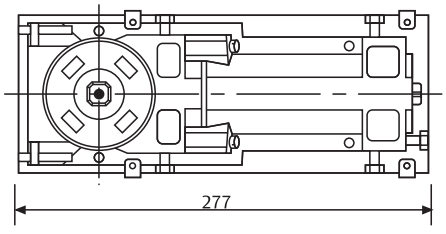

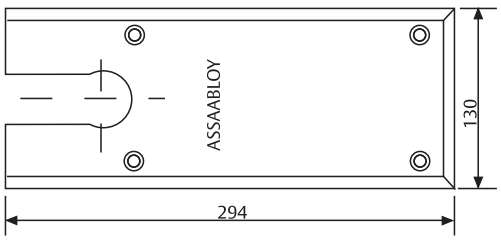

Floor Springs - DC477

ASSA ABLOY

Floor Spring

DC477

Technical details:

Adjustable closing force	EN2-4
Door width up to	1100mm
Door weight up to	170kg
Max. opening angle	175° (Max. 150° in case of no hold-open)
Closing speed	Variable between 150°-15°
Latching speed	Variable between15°- 0°
Back-check	Mechanical
Weight	5.4kg
Height	70mm
Length	277mm
Width	110mm
Body adjustment within cement box	Vertical 9mm, side 4mm, front 10mm, angular 4°
DIN-direction	Left/Right handed double-action doors
Hold-open mode	90°/105°/Non hold-open
In compliance with	EN1154
CE marking for building products	Yes
Fire and smoke protection	Yes

Our service for you

Here you can see the individual advantages of our floor spring models for your respective fields of business.

The advantages at a glance

Customer segment	*Advantages*
Project planners	• Extensive range of uses: Fire and smoke protection doors as well as standard doors • Hold-open at 90°, 105° and non hold-open • Variety of available spindles: squared Italian, rectangular German • Architectural finishes: Cover plates and eyelets in Polished Stainless Steel, Satin Stainless Steel, Polished Brass
Builders	• Univeral for Left / Right handed and double-action doors • Overpressure relief valve to protect unit against abuse • Large range of adjustment within cement box to solve possible alignment problems on the site without taking down the door
Trade	• Reduce inventory costs due to modular product range • One single product suitable for a large variety of mounting position • Complementary accessories available for the whole product range
User	• Ideal for residential interiors, thanks to adjustable opening / closing force that makes opening / closing easy • Adjustable operating force to meet door construction requirements and user needs • Back-check feature offers optimum protection for doors and walls • Easier door opening and improved accessibility due to rapidly descreasing opening force (Cam Motion®)

Floor Spring

Dimensional drawings for DC477

Double-action door mounting

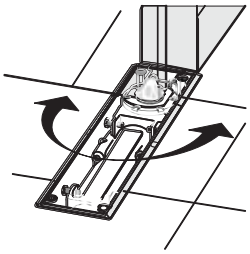

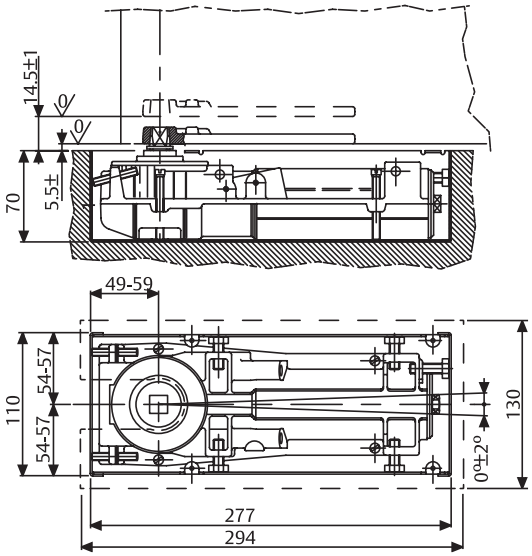

Right-handed double-action door with patch fitting V500 bottom hinge for centre-hung doors

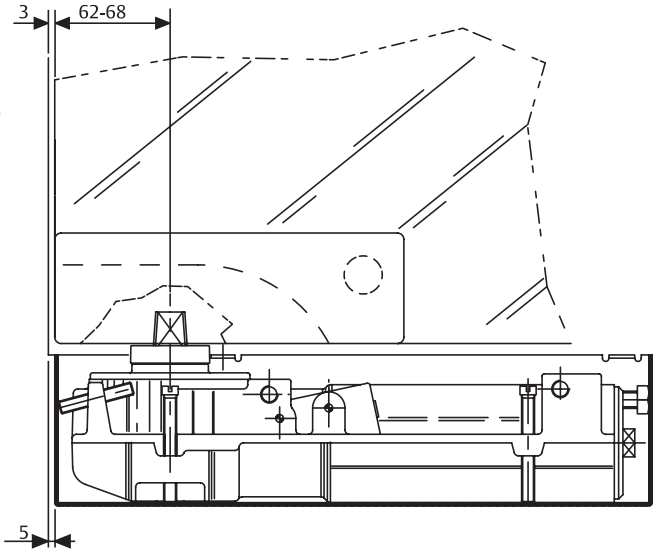

Left-handed double-action door with patch fitting V500 bottom hinge for centre-hung doors

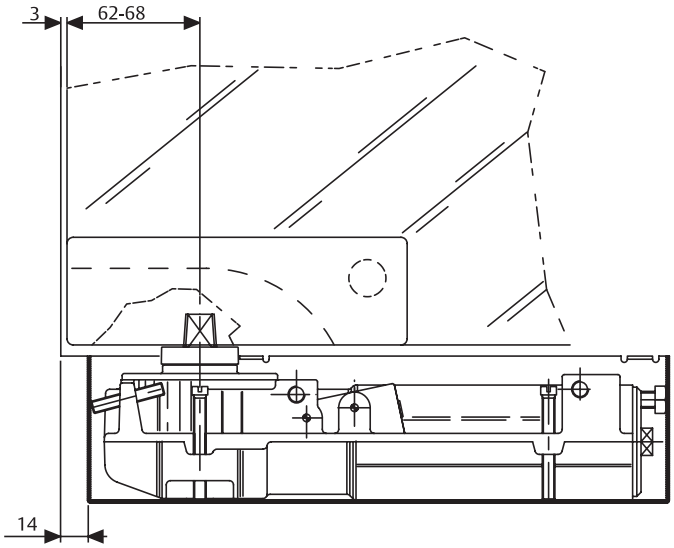

Floor Spring

Accessories for DC477

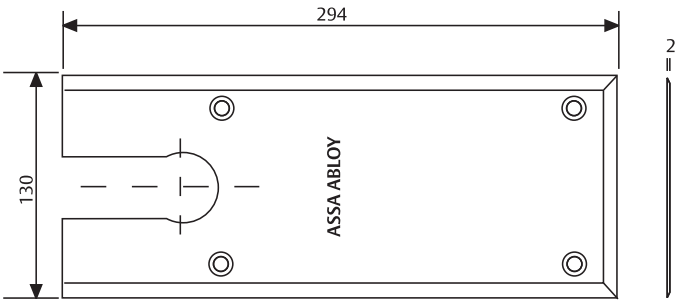

AC534

Available in Satin Satinless Steel, Polished Satinless Steel and Polished Brass.

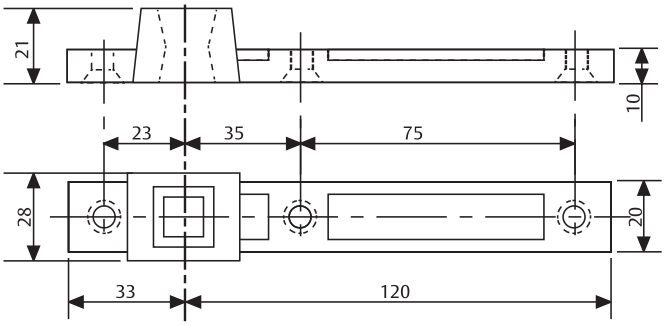

AC115

Reversible bottom arm in steel for double action doors, socket for Italian squared spindle.

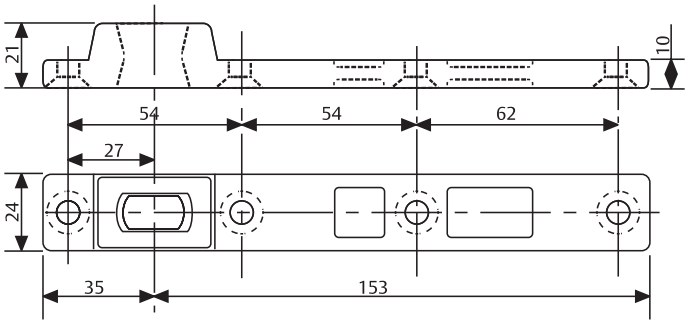

AC393

Reversible bottom arm in steel for double action doors, socket for German rectangular spindle.

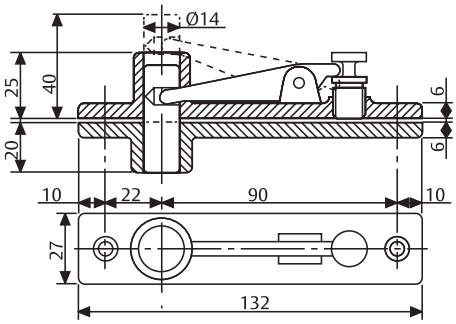

AC8

Double action top pivot

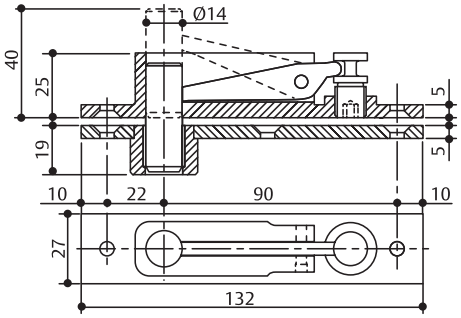

AC375

Double-action top pivot in full steel with self-lubricating bushing

Heavy-Duty Floor Closers

Floor closers provide the best mechanical means to support and control a door. They are designed to work with the laws of physics to provide long-lasting performance and reliability.

The weight of the door is supported by bottom arm and floor

- Door swings with less resistance
- Heavier doors can be accommodated
- Reduced stress on frame
- Fasteners are in shear, not tension
- Eliminates door sag
- Vertically adjustable

Heavy-duty, hardened, one piece steel spindles

- Designed to provide positive dead stop
- Thrust bearing supports vertical load
- Needle bearings for lateral forces
- Extra heavy-duty models also have an additional surface applied thrust bearing to handle heavier doors or doors that have very high traffic

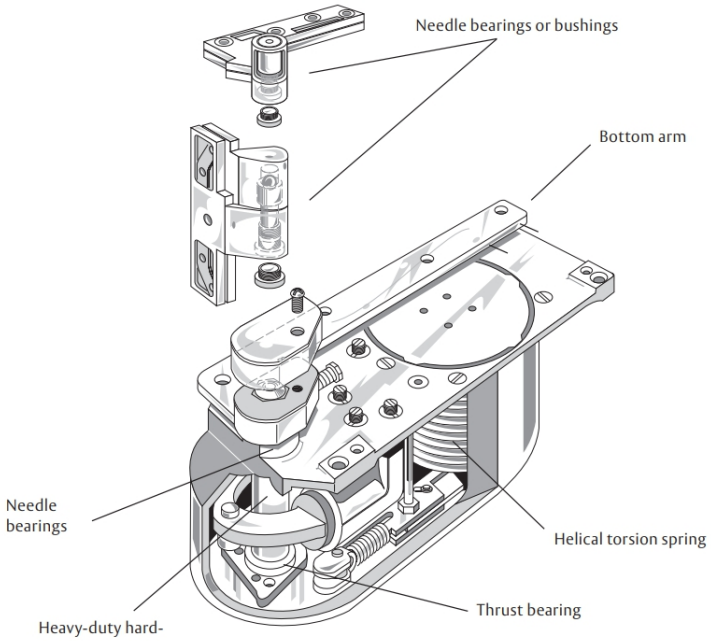

27 Closer with 180 Top Pivot and M19 Intermediate Pivot (Recommended)

Bottom arm attached directly to closer spindle

- A mechanical advantage that increases efficiency insuring that ICC/ANSI A117.1 compliant, lower opening forces, will still close the door
- One to one ratio of door swing to spindle rotation makes control more precise
- Floor closers are more efficient than a regular
- arm surface closer

Helical torsion spring

- Operates in same direction as door movement and contributes to even higher closer efficiency
- A torsion spring has a much longer life than standard compression springs

Advantages of concealed floor closers

- Aesthetics – let the beauty of the door and its surroundings take center stage
- Vandal resistant – mechanism not exposed
- The solution for arch top doors – offset floor closers
- Both mechanical advantage and aesthetics – a concealed floor closer exclusive

Advantages of concealed floor closers

- Use standard product with a top pivot for the best efficiency
- Use a quick install (Q) model to facilitate easy closer removal
- Use extra heavy-duty (L & H) (L-offset) (H-center hung) models for higher traffic/lead lined or extremely heavy doors
- Use model HM with 3/4" offset hinges for hollow metal doors and frames prepared for 4-1/2" hinges
- Closers can be offset hung, center hung or independently hung, single or double acting (center hung only)

RIXSON® ASSA ABLOY

HIP

Single - Acting Center Hung

Model H28

RIXSON ASSA ABLOY

Application

- Single Acting, Handed
- Exterior or Interior Doors
- Extra Heavy High Traffic Doors
- Weight to 1000 lbs
- Sizes up to 4'0" x 8'6"** (1219 x 2591mm)

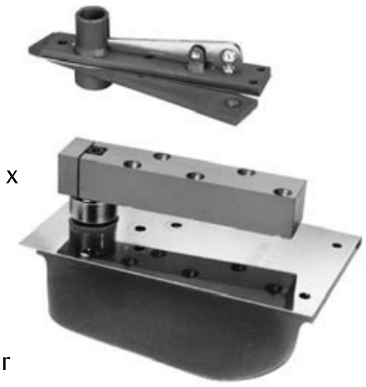

(Frame stop required at lock edge)

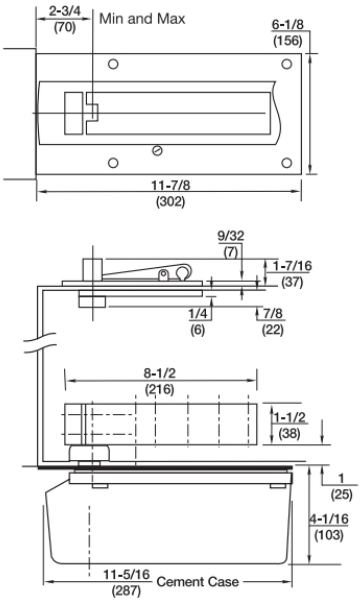

Product Description & Features

- H340 top pivot included
- Available non-hold open (N) or selective hold open (S) at same degree as dead stop
- Built-in positive dead stop prevents door from swinging beyond the desired opening degree (specify 85°, 90°, 95° or 105°)
- For high traffic or extra heavy doors (2" min. thickness)
- Additional thrust bearing for greater load capacity
- Separate and independent valves for closing speed, latch speed and backcheck
- Available with floor plate or threshold installation (floor plate shown)
- Cast iron cement case
- Not allowed for fire rated doors
- Frame stop required at header on lock side. If not supplied by frame manufacturer, Rixson 60131 recommended. Consult Door Control Accessories Catalog.
- Furnished with wood and machine screws

Optional Features

- Delayed action option – prefix "DA" (non-hold open closers only)
- Cold weather fluid option – specify "CWF" (not available for closers with "DA")
- Sealed closer option – specify "SC"
- Extended spindles available in 1/2" increments up to 2" longer than standard
- Compliance
- Models available to meet ICC/ANSI A117.1 low opening force requirements, prefix "PH".
- (For 8-1/2 lbs. of opening force prefix "PH" and suffix "8-1/2 lbs.")
- ANSI/C06061

Single - Acting Center Hung

Model EH28

RIXSON
ASSA ABLOY

Application

- Single Acting, Handed
- Interior or Exterior Doors
- Floor Closer for Power Transfer
- Weight to 500 lbs.
- Sizes up to 4'0" x 8'6"** (1219 x 2591mm)

(Frame stop required at lock edge)

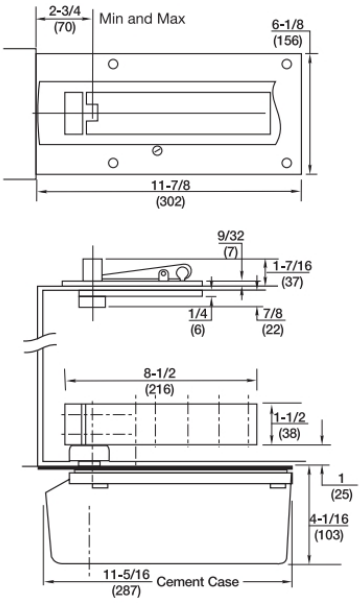

Product Description & Features

- H340 top pivot included
- Available non-hold open (N) or selective hold open (S) at same degree as dead stop
- Built-in positive dead stop prevents door from swinging beyond the desired opening degree (specify 85°, 90°, 95° or 105°)
- Provides power transfer through closer spindle. Low voltage, Class II wiring (2 wire, 18 gauge only)
- 2" min. door thickness
- Additional thrust bearing for greater load capacity
- Separate and independent valves for closing speed, latch speed and backcheck
- Available with floor plate or threshold installation (floor plate shown)
- Cast iron cement case
- Not allowed for fire rated doors
- Frame stop required on header on lock side. If not supplied by frame manufactuer, Rixson 60131 recommended. Consult Door Control Accessories Catalog.
- Furnished with wood and machine screws

Optional Features

- Delayed action option – prefix "DA"
- Cold weather fluid option – specify "CWF" (not available for closers with "DA")
- Sealed closer option – specify "SC"
- Extended spindles available in 1/2" increments up to 2" longer than standard

Compliance

- Models available to meet ICC/ANSI A117.1 low opening force requirements, prefix "PH". (For 8-1/2 lbs. of opening force prefix "PH" and suffix "8-1/2 lbs.")

EH28 X 587 ARM

Product Description & Features

Identical to Model EH28 except:

- Special side load arm for 1-3/4" thick doors
- Allows pivot point to be moved away from pivot edge of door – minimum 2-3/4" backset

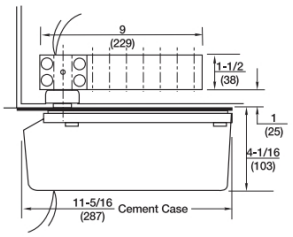

3/4" Offset Hung

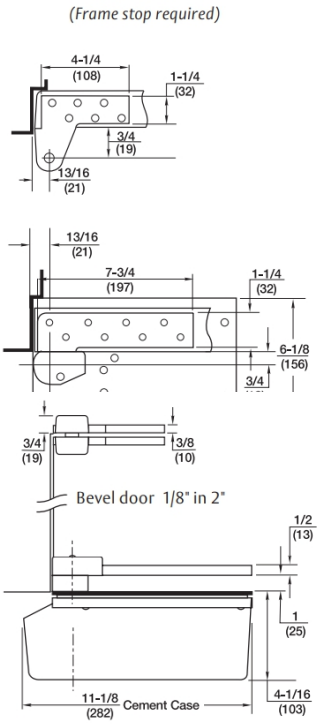

Model L27-180

RIXSON
ASSA ABLOY

Application

- Single Acting, Handed
- Exterior or Interior Doors
- Lead-Lined, Heavy, High Traffic Doors
- Weight to 1500 lbs.**
- Door Width up to 4'0" (1219mm)

Product Description & Features

- L180 top pivot included
- ML19 intermediate pivot(s) required (order separately)
- Heavy-duty bottom arm and top pivot with screw holes spaced to straddle lead lining, or for extra heavy or very high traffic doors.
- Available for the following lead-lined door thicknesses: 1-3/4" (44mm), 2" (51mm), 2-1/4" (57mm), 2-1/2" (63mm) or 3" (76mm)
- Available non-hold open (N) or automatic hold open (A) at 180°
- Built-in positive dead stop prevents door from swinging beyond 180° only
- Additional thrust bearing for greater load capacity
- Separate and independent valves for closing speed, latch speed and backcheck
- Vertical door adjustment
- Available with floor plate or threshold installation (floor plate shown)
- Cast iron cement case
- For arch top doors or applications where a L180 top pivot cannot be used, supply at least two each
- ML19 load bearing intermediate pivots, mounted together at the top of the vertical edge
- Doors 60" (1524mm) to 90" (2286mm) in height should use one intermediate pivot. Each additional 30" (762mm) warrants another intermediate pivot
- Furnished with wood and machine screws

Optional Features

- Delayed action option - prefix "DA" (non hold-open closers only)
- Cold weather fluid option – specify "CWF" (not available for closers with "DA")
- Sealed closer option – specify "SC"
- For extended offsets, consult factory
- Extended spindles available in 1/2" increments up to 2" longer than standard

Compliance

- Models available to meet ICC/ANSI A117.1 low opening force requirements, prefix "PH". (For 8-1/2 lbs. of opening force prefix PH and suffix 8-1/2 lbs.)
- For fire rated openings (up to 3 hour assemblies) prefix "F". This package will be supplied with a FL180 steel top pivot and non-hold open closer. Furnish FML19 intermediate pivot (order separately). Note: UL listing for 1-3/4" thick doors only.
- UL labeled closers cannot have PH option
- For 20-minute labeled doors suffix "-20" to the part number
- ANSI/C06071

Offset Pivot AD300

ASSA ABLOY

AD300 Series
Top & bottom offset pivot set

ASSA ABLOY AD300 offset pivot

EN12211, 6000Pa certificated.
Compliance: ANSI 156.4, Grade 1.GB 12955-2008, 90 mins fire rated UL, 3 hours fire rated

- Material: Stainless steel (SUS 304)
- Finish: SSS, PVD, PS
- Suitable for wooden doors and steel doors.
- Precision bearing for smooth operation with dust proof

Description:
- Min door thickness: 45mm
- Be adjustable for 4.5mm in vertical direction
- Load capacity: 700 pounds (320kgs)

Notes:
- When the standard load capacity is more than 45kgs, a intermediate pivot should be configured
- When the door is taller than 2200mm, a intermediate pivot should be configured

Type	*Art. No.*
Top & Bottom pivot set for door upto 300kg - Left handed	AD300LH US32D
Top & Bottom pivot set for door upto 300kg - Right handed	AD300RH US32D

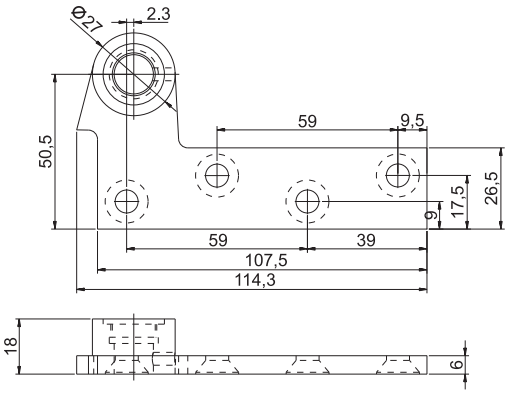

Top pivot

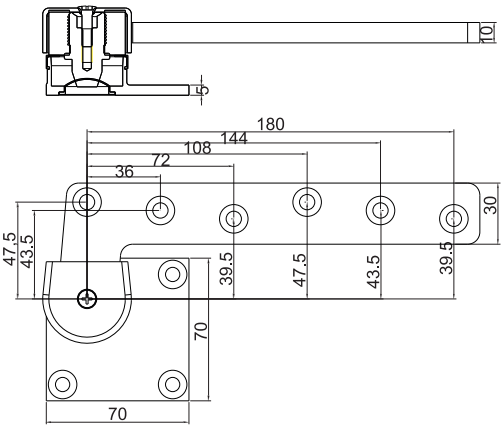

Bottom pivot

Offset Pivot AD300

ASSA ABLOY

AD300-2 Series Intermediate hinge

ASSA ABLOY AD300 offset pivot

- Material: Stainless steel (SUS 304)
- Handed
- Use with Ad300
- Vertical adjustment 4.5mm, include positive locking

Notes:

- When the standard load capacity is more than 45kgs, a intermediate pivot should be configured
- When the door is taller than 2200mm, a intermediate pivot should be configured

Type	*Art. No.*
Intermediate hinge for pivot 300kg, SUS304 - Left hand	AD300-2LH US32D
Intermediate hinge for pivot 300kg, SUS304 - Right hand	AD300-2RH US32D

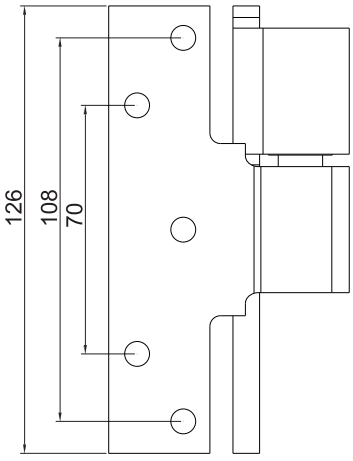

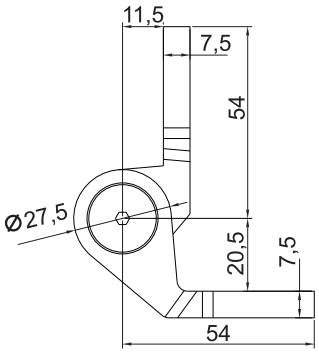

Floor Spring - DC460

Floor Spring with Cam Motion® technology and fixed closing force for very thin slabs

ASSA ABLOY DC460

- Floor spring with fixed closing force for very thin slabs
- In compliance with EN1154, size EN2/3/4
- Suitable for fire and smoke protection doors
- For single and double-action doors up to 120kg

Characteristics of DC460

- Same dimensions for three bodies according to fix size EN2/EN3/EN4
- Hydraulic control over 130° in both door swing directions
- Adjustable closing speed and latching speed through top regulating valves
- Cast Iron body
- Adjustments in all directions within the cement box
- Cement box is painted black and only 40mm high cement box
- Cover plates and eyelets are made in Polished or Satin Satinless Steel
- Interchangeable spindle from 0 to 30mm
- Available without hold-open or with hold-open angle 90°, 105°

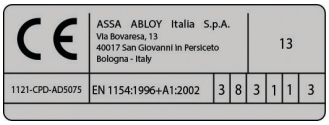

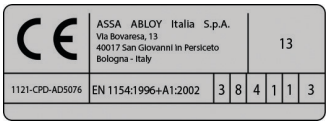

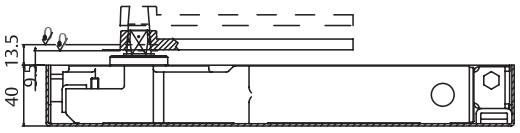

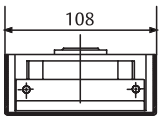

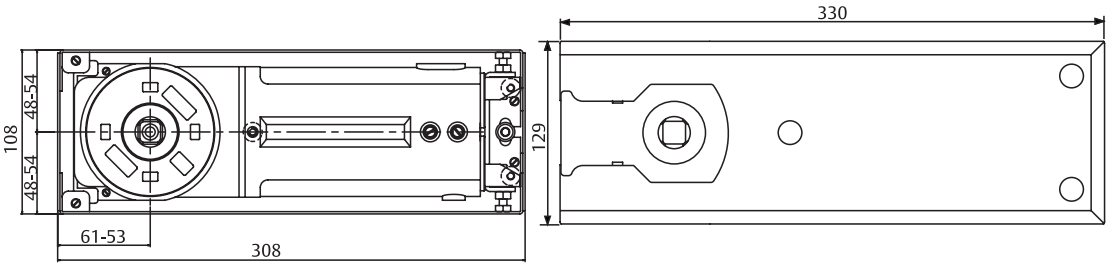

Floor Spring - DC460

ASSA ABLOY

Floor Spring

DC460

Technical details:

Fix closing force	EN2/EN3/EN4
Door width up to	850mm/950mm/1100mm
Door weight up to	120kg
Max. opening angle	130°
Closing speed	Variable between 130°-15°
Latching speed	Variable between15°- 0°
Back-check	No
Weight	5kg
Height	40mm
Length	308mm
Width	108mm
Body adjustment within cement box	Vertical 4mm, side 6mm, front 8mm, angular 2°
DIN-direction	Left/Right handed double-action doors
Hold-open mode	90°/105°/Non hold-open
In compliance with	EN1154
CE marking for building products	Yes
Fire and smoke protection	Yes

Our service for you:

Here you can see the individual advantages of our floor spring models for your respective fields of business.

The advantages at a glance:

Customer segment	*Advantages*
Project planners	• Extensive range of uses: Fire and smoke protection doors as well as standard doors • Particularly suitable in case of double-action glass doors • Recommended for thin slabs • Hold-open at 90°, 105° and non hold-open • Variety of available spindles: squared Italian, rectangular German • Architectural finishes: Cover plates and eyelets in Polished Stainless Steel, Satin Stainless Steel, Polished Brass
Builders	• Univeral for Left / Right handed and double-action doors • Large range of adjustment within cement box to solve possible alignment problems on the site without taking down the door
Trade	• Reduce inventory costs due to modular product range • One single product suitable for a large variety of mounting position
User	• Complementary accessories available for the whole product range • Easier door opening and improved accessibility due to Cam Motion® technology

Floor Spring

Dimensional drawings for DC460

Double-action door mounting

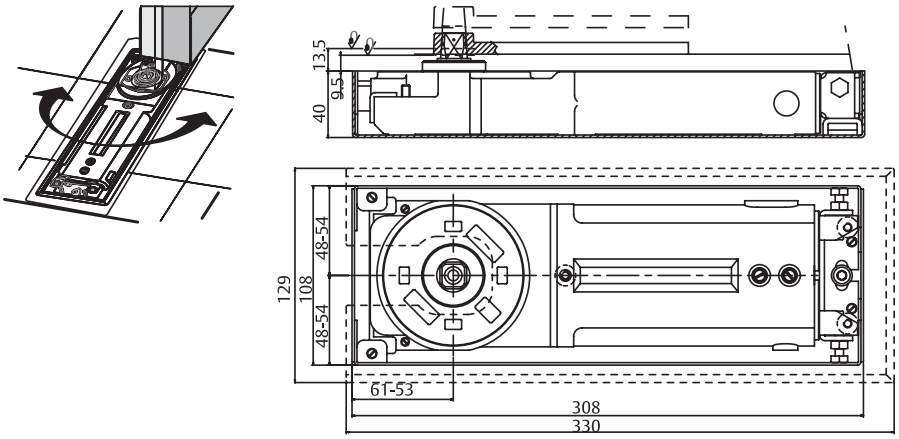

Left-hand door mounting special installation below door frame

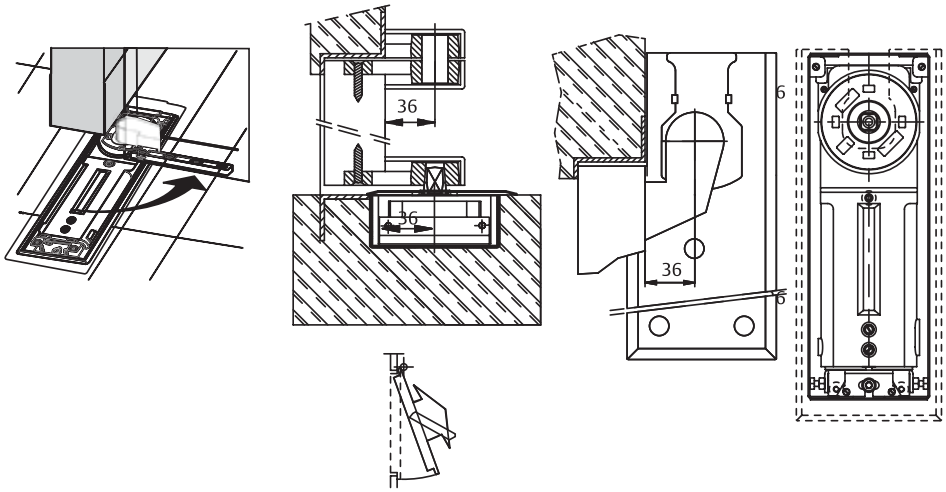

Right-hand door mounting special installation below door frame

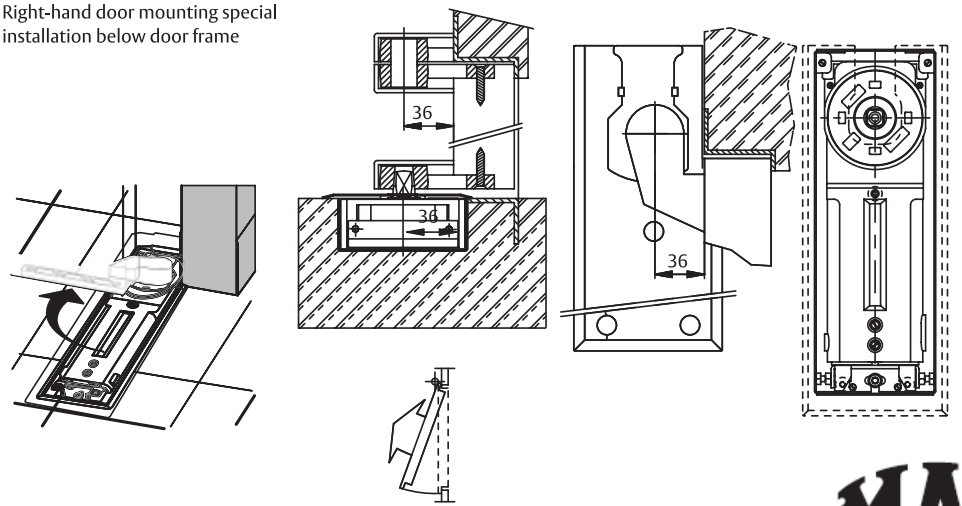

Floor Spring

Accessories for DC460

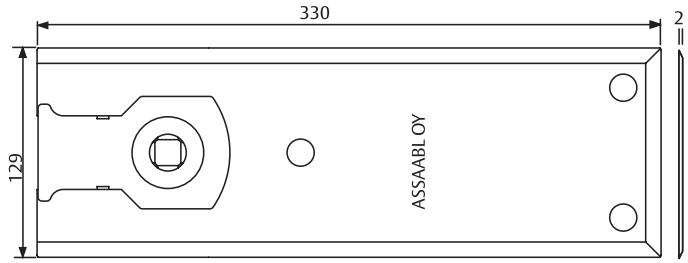

AC616

Available in Satin Satinless Steel, Polished Satinless Steel and Polished Brass.

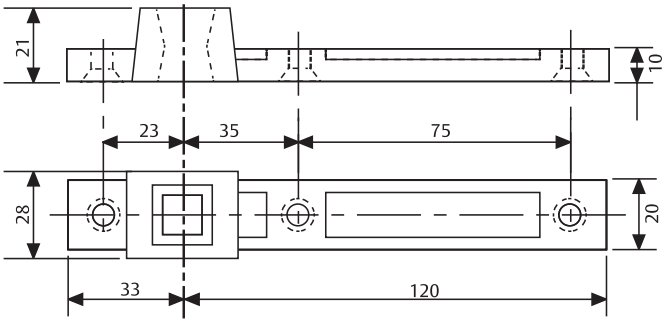

AC115

Reversible bottom arm in steel for double-action doors, socket for Italian squared spindle.

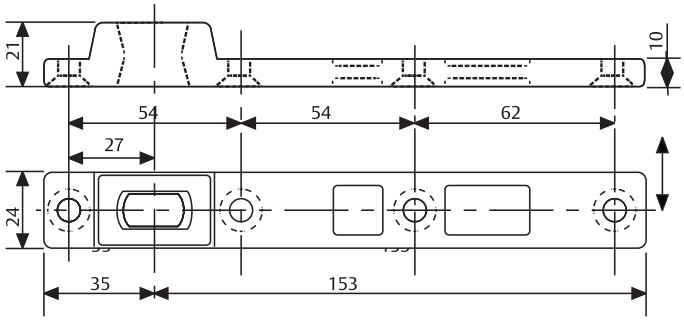

AC393

Reversible bottom arm in steel for double-action doors, socket for German rectangular spindle.

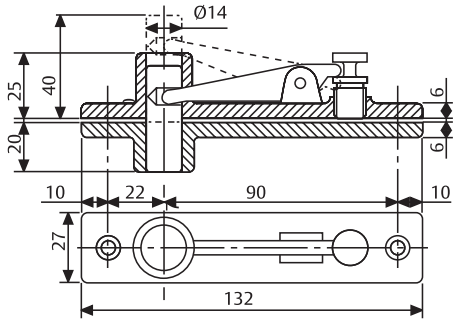

AC8

Double action top pivot

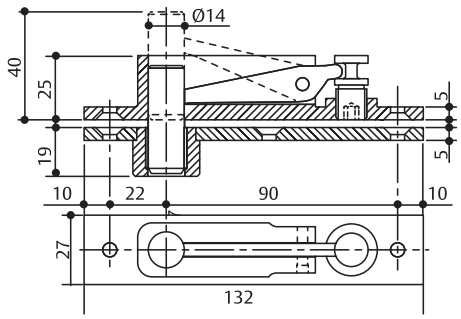

AC375

Double action top pivot in full steel with self-lubricating bushing

Floor Spring

Accessories for DC460

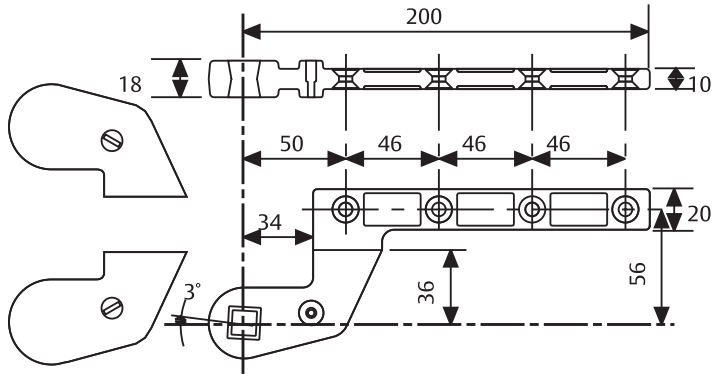

AC583
Right and left bottom arm in steel for single action doors, 36mm offset, socket for Italian square spindle. Silver or Black painted.

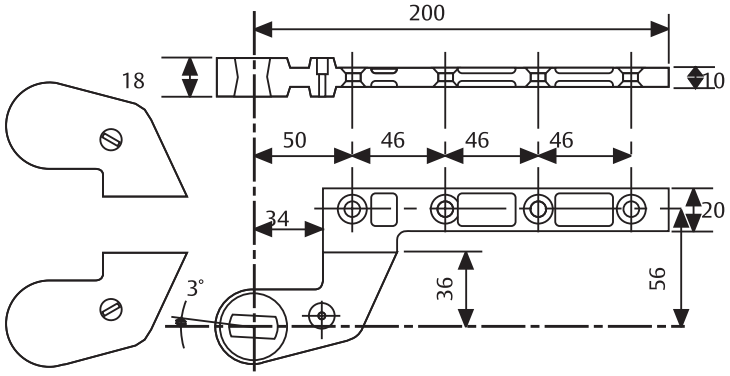

AC392
Right and left bottom arm in steel for single action doors, 36 mm offset, socket for German rectangular spindle. Silver and Black painted ABS covers.

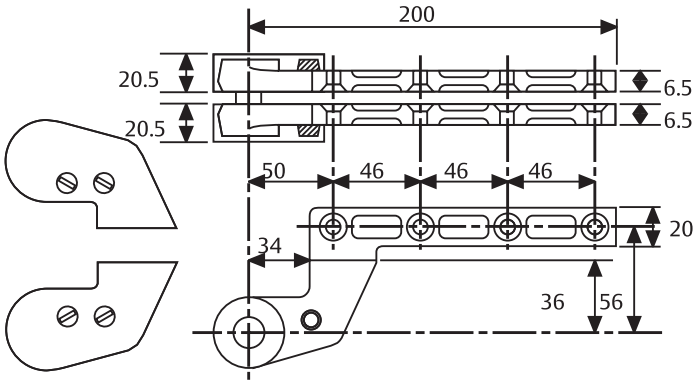

AC384
Right and left top arm in full steel, 36mm offset, Silver or Black painted ABS cover.

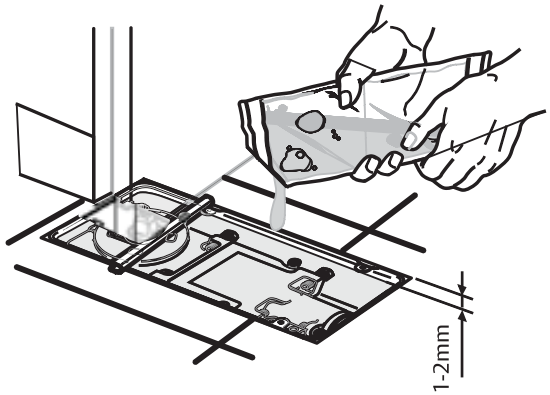

AC612
Sealing compound for floor springs

Floor Spring - DC460

ASSA ABLOY

Floor Spring

Accessories and order placement information for DC460

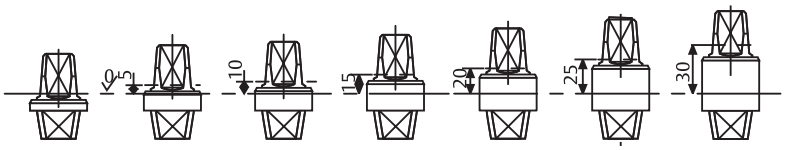

AC340A	C341	AC342A	C343A	C344	AC345A	C346
AC360A	C361	AC362A	C363A	C364	AC365A	C366

IT
GE

Detachable spindles

Italian spindle - square shape (left image)
German spindle - flat-conical shape (right image)

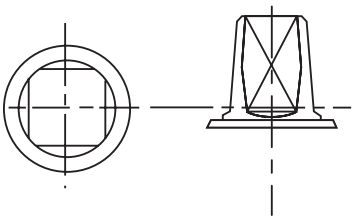

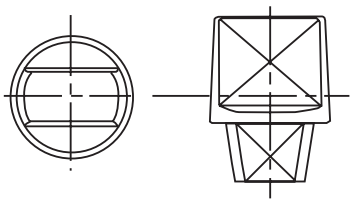

You can find the complete specifications on the internet at: www.assaabloy.com, under "Service" in the support section.

Specification for DC460

- ASSA ABLOY Floor spring DC460 featuring CAM Motion® technology is in compliance with EN1154
- Closing power variable adjustable, size EN 2/3/4 for door up to 120kg and 1100mm wide
- Closing speed, latching speed adjustable through top regulating valves
- CE approved
- 40mm height cement box
- CE approved
- Suitable for Left / Right handed double-action dooors

Accessories

- AC115 - Reversible bottom arm Italian spindle
- AC393 - Reversible bottom arm German spindle
- AC8 - Double action top pivot
- AC375 - Double action top pivot
- AC583 - Right and left bottom arm. Socket for Italian square spindle
- AC392 - Right & left bottom arm. Socket for German rectangular spindle
- AC384 - Top pivot for left or right doors
- AC612 - Sealing compound for floor springs
- AC269 - Cover plate for DC475

Colour:

- Polished Stainless Steel
- Satin Stainless Steel

Ordering details

Product description	*Art. No.*
ASSA ABLOY DC460 Floor Spring - Size 2	DC460 EN2
ASSA ABLOY DC460 Floor Spring - Size 3	DC460 EN3
ASSA ABLOY DC460 Floor Spring - Size 4	DC460 EN4

Floor Spring - DC450

Floor Spring with Cam Motion® technology and fixed closing force for very thin slabs

ASSA ABLOY DC450

- Floor spring with fixed closing force for very thin slabs
- In compliance with EN1154, size EN3/EN4
- Suitable for fire and smoke protection doors
- For single and double-action doors up to 120kg

Characteristics of DC450

- Same dimensions for two bodies according to fix size EN3/EN4
- Hydraulic control over 130° in both door swing directions
- Adjustable door speed and latching speed through top regulating valves
- Cast Iron body
- Adjustments in all directions within the cement box
- Cement box is hot zinc plated and only 40 mm high
- Cover plates and eyelets are made in Polished or Satin Satinless Steel
- Interchangeable spindle from 0 to 30mm
- Available without hold-open or with hold-open angle 90°, 105°

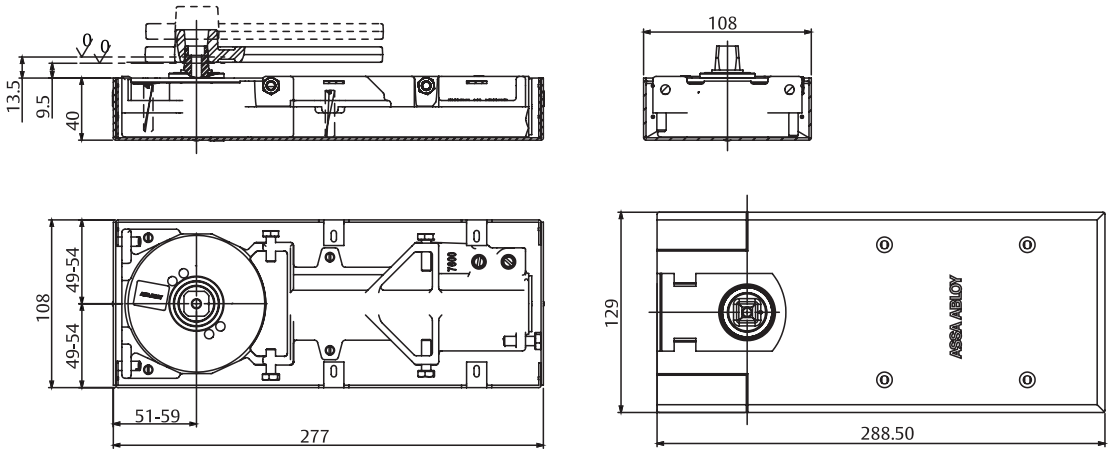

Floor Spring - DC450

ASSA ABLOY

Floor Spring

DC450

Technical details:

Fix closing force	EN3/EN4
Door width up to	950mm/1100mm
Door weight up to	120kg
Max. opening angle	130°
Closing speed	Variable between 130°-15°
Latching speed	Variable between 15°- 0°
Back-check	No
Weight	3.8kg
Height	40 mm
Length	277 mm
Width	108 mm
Body adjustment within cement box	Vertical 2mm, side 6mm, front 7mm, angular 4°
DIN-direction	Left/Right handed or double-action
Hold-open mode	90°/105°/Non hold-open
In compliance with	EN1154

Our service for you:

Here you can see the individual advantages of our floor spring models for your respective fields of business.

The advantages at a glance:

Customer segment	*Advantages*
Project planners	• Extensive range of uses: Fire and smoke protection doors as well as standard doors • Particularly suitable in case of double-action glass doors • Recommended for thin slabs • Hold-open at 90°, 105° and non hold-open • Variety of available spindles: squared Italian, rectangular German • Architectural finishes: Cover plates and eyelets in Polished Stainless Steel, Satin Stainless Steel, Polished Brass
Builders	• Univeral for Left / Right handed and double-action doors • Large range of adjustment within cement box to solve possible alignment problems on the site without taking down the door
Trade	• Reduce inventory costs due to modular product range • One single product suitable for a large variety of mounting position
User	• Complementary accessories available for the whole product range • Easier door opening and improved accessibility due to Cam Motion® technology

Floor Spring

Dimensional drawings for DC450

Double-actiondoormounting

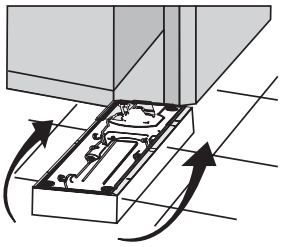

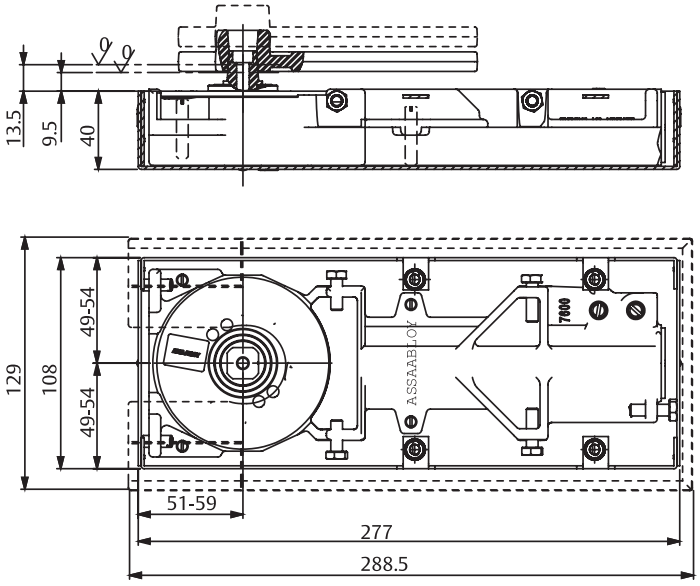

Left-handdoo r mounting special installationbelo w door frame

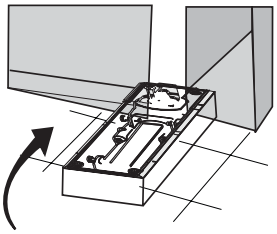

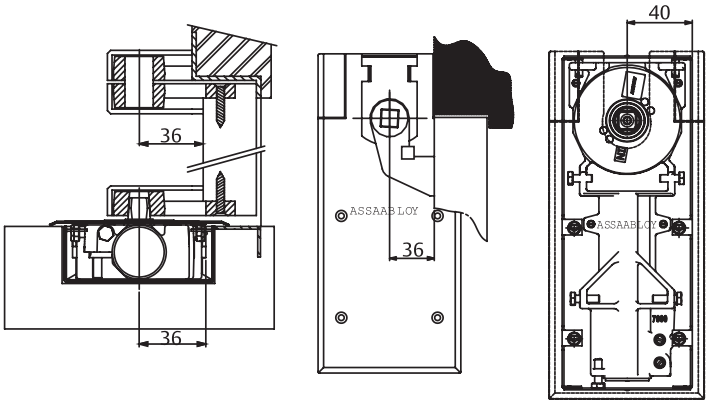

Right-h anddoormountingspecial installationbelo w doorframe

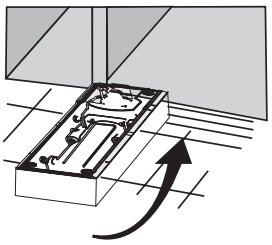

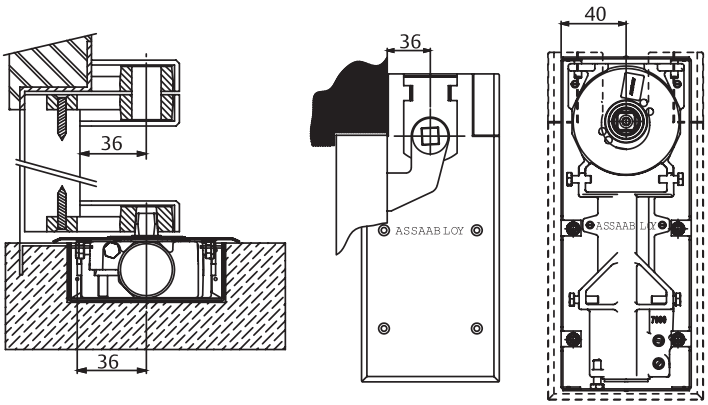

Floor Spring

Accessories for DC450

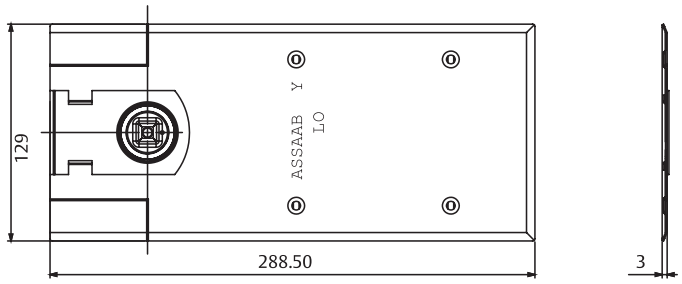

AC619

Available in Satin Satinless Steel, Polished Satinless Steel and Polished Brass.

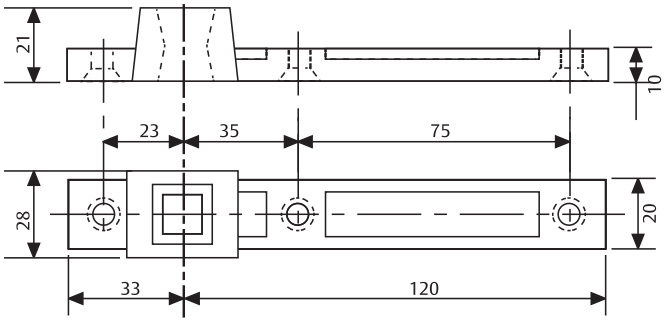

AC115

Reversible bottom arm in steel for double action doors, socket for Italian squared spindle.

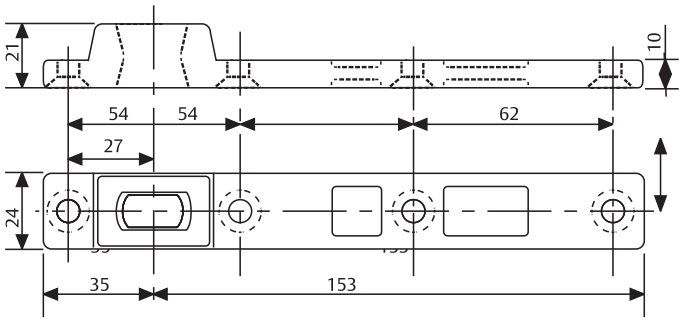

AC393

Reversible bottom arm in steel for double action doors, socket for German rectangular spindle.

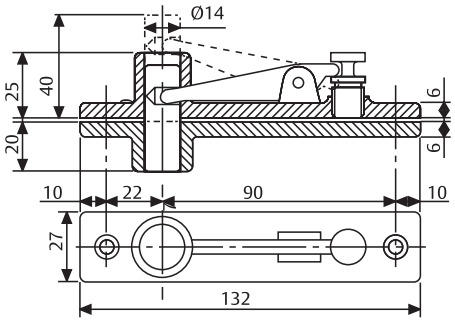

AC8

Double-action top pivot

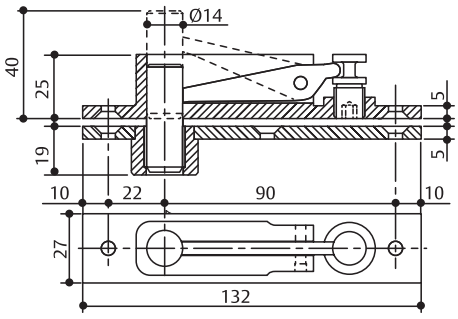

AC375

Double-action top pivot in full steel with self-lubricating bushing

Floor Spring

Accessories and order placement information for DC450

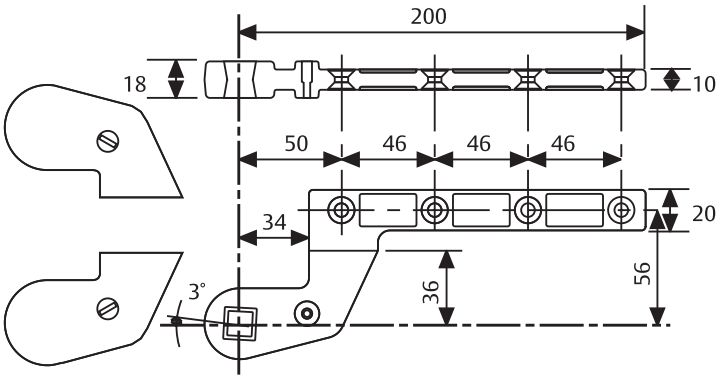

AC583
Right and left bottom arm in steel for single action doors, 36mm offset, socket for Italian square spindle, Silver or Black painted.

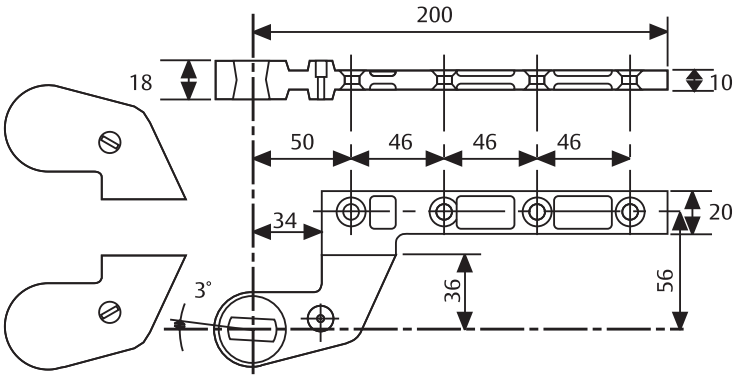

AC392
Right and left bottom arm in steel for single action doors, 36 mm offset, socket for German rectangular spindle, Silver and Black painted ABS covers.

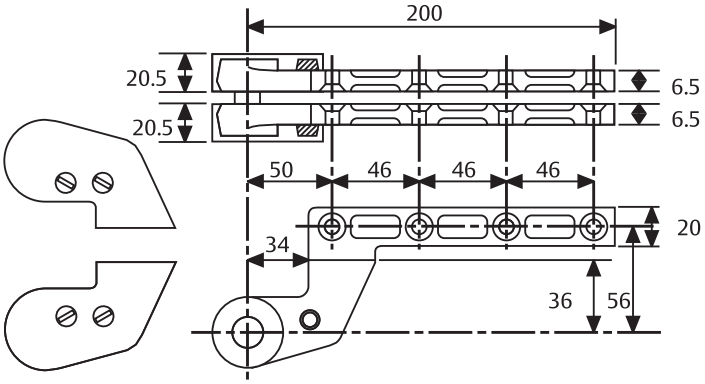

AC384
Right and left top arm in full steel, 36mm offset. Silver or Black painted ABS cover.

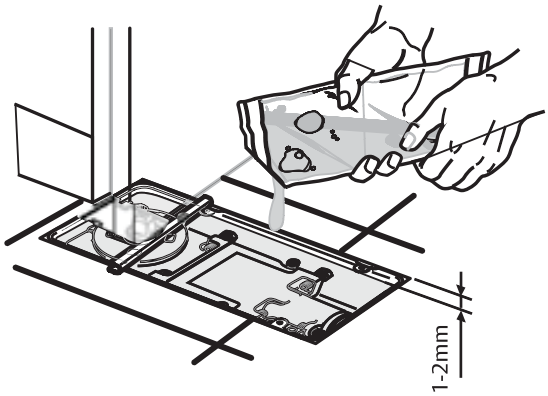

AC612
Sealing compound for floor springs

Floor Spring

Accessories and order placement information for DC450

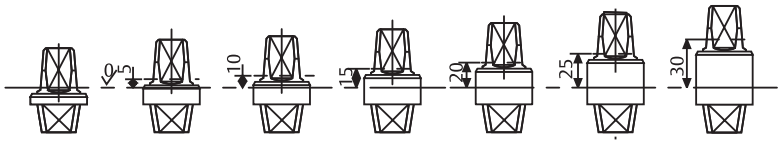

AC340A	C341	AC342A	C343A	C344	AC345A	C346
AC360A	C361	AC362A	C363A	C364	AC365A	C366

Detachable spindles
Italian spindle - square shape (left image)
German spindle - flat-conical shape (right image)

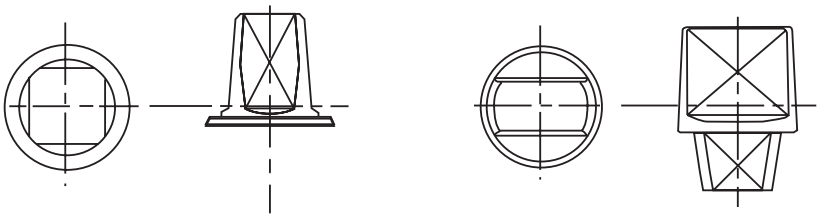

Floor Spring

Specifications for DC450

Specification for DC450

- ASSA ABLOY Floor spring DC450 featuring CAM Motion® technology is in compliance with EN1154
- Closing power variable adjustable, size EN 3/4 for door up to 120kg and 1100mm wide
- Closing speed, latching speed adjustable through top regulating valves
- CE approved
- 40mm height cement box
- CE approved
- Suitable for Left / Right handed double-action dooors

Accessories

- AC115 - Reversible bottom arm Italian spindle
- AC393 - Reversible bottom arm German spindle
- AC8 - Double action top pivot
- AC375 - Double action top pivot
- AC583 - Right and left bottom arm. Socket for Italian square spindle
- AC392 - Right & left bottom arm. Socket for German rectangular spindle
- AC384 - Top pivot for left or right doors
- AC612 - Sealing compound for floor springs
- AC269 - Cover plate for DC475

Colour:

- Polished Stainless Steel
- Satin Stainless Steel

Floor Spring

Ordering details for DC450

Product description	*Art. No.*
ASSA ABLOY DC460 Floor Spring - Size 3	DC460 EN3
ASSA ABLOY DC460 Floor Spring - Size 4	DC460 EN3

Odering matrix and replaceable spindle calculation

The following table shows the product and accessories overview and enables to select the right accessories for ASSA ABLOY floor springs. The table below shows how to choose the correct replaceable spindle. The distance between the door leaf and the floor can be enlarged if needed by means of various heights of replaceable spindles.

											Cover plate			
Floor Spring	EN Size	Hold open	Article Number	CE		Max. door leaf width	Max door leaf weight	Max opening angle	Double/ Single action	Interior/ Exterior	Polished Brass	Satin Satinless Steel	Polished Satinless Steel	Cealing Compound
DC450	EN3		DCE7293TS0	CE		≤950mm	120 kg	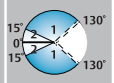	Single action/ Double action	Interior		DCA0619QR	DCA0619IR	MA0612S0
		90°	DCE7263TS0											
		105°	DCE7213TS0											
	EN4		DCE7294TS0	CE		≤1100mm				Interior + Exterior				
		90°	DCE7264TS0											
		105°	DCE7214TS0											
DC460	EN2		DCE6092TSW			≤850mm	120 kg	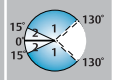	Single action/ Double action	Interior		DCA0616QW	DCA0616IW	
		90°	DCE6062TSW											
		105°	DCE6012TSW											
	EN3		DCE6093TSW	CE		≤950mm								
		90°	DCE6063TSW											
		105°	DCE6013TSW											
	EN4		DCE6094TSW	CE		≤1100mm				Interior + Exterior				
		90°	DCE6064TSW											
		105°	DCE6014TSW											
DC475	EN3-6		DCE7490TSR	CE		≤1400mm	300 kg	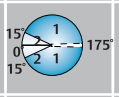	Single action/ Double action	Interior + Exterior	DCA0269PR	DCA0269HR	DCA0269IR	
		90°	DCE7460TSR											
		105°	DCE7410TSR											
DC477	EN2-4		DCE7980TSR	CE		≤1100mm	170 kg	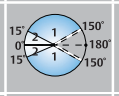	Single action/ Double action	Interior + Exterior	DCA0534PR	DCA0534HR	DCA0534IR	
		90°	DCE7960TSR											
		105°	DCE7910TSR											
DC420	EN3		DCE4293TSR	CE		≤950mm	100 kg		Single action/ Double action	Interior	DCA0307PR	DCA0307HR	DCA0307IR	
		90°	DCE4263TSR											
		105°	DCE4213TSR											
	EN4		DCE4294TSR	CE		≤1100mm				Interior + Exterior				
		90°	DCE4264TSR											
		105°	DCE4214TSR											

Floor Spring	HA min	HA max	AC340/ AC360	AC341/ AC361	AC342/ AC362	AC343/ AC363	AC344/ AC364	AC345/ AC365	AC346/ AC366	X	
	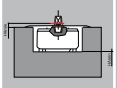	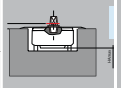	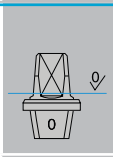	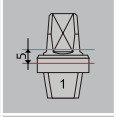	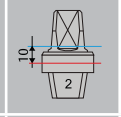	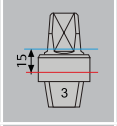	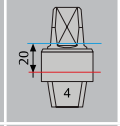	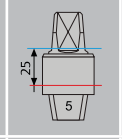	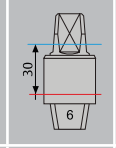		X min	X max
DC420	5.5mm	10.5mm	0mm	5mm	10mm	15mm	20mm	25mm	30mm		5.5mm	40.5mm
DC460	9.5mm	13.5mm									9.5mm	43.5mm
DC477	5.5mm	15mm									5.5mm	45mm
DC475	4mm	13.5mm									4mm	43.5mm

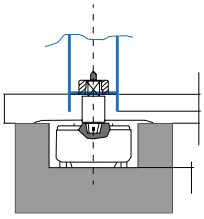

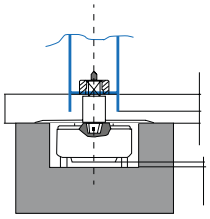

Legend:
HA = Height adjustment within the cement box
SH = Spindle Height
X = Floor clearance

Formula **Example**

X = HA + SH **X** = 34.5mm **Floor Spring** = DC420 **HA min** = 5.5 **HA max** = 10.5

34.5mm = (5.5mm or 10.5mm) + SH;

SH max = 29mm AC345/AC365;

SH min = 24.5mm AC344/AC364

Ordering Assistance

Extended Spindle (0 - 30mm)				
Spindle Type	Square type (Italian)		Flat-conical type (German)	
	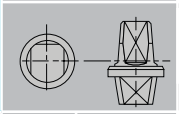		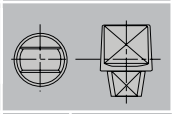	
Extension	Name	Art. no.	Name	Art. no.
0mm	AC360	MA0360S0	AC340	MA0340S0
5mm	AC361	MA0361S0	AC341	MA0341S0
10mm	AC362	MA0362S0	AC342	MA0342S0
15mm	AC363	MA0363S0	AC343	MA0343S0
20mm	AC364	MA0364S0	AC344	MA0344S0
25mm	AC365	MA0365S0	AC345	MA0345S0
30mm	AC366	MA0366S0	AC346	MA0346 S0

	TOP PIVOT				BOTTOM PIVOT					
Single/Double	S. Action	Double Action			Single Action		Double Action			
Pivot name	A384	A8	A118	A375	AC583	AC392	AC2	AC213	AC115	AC393
	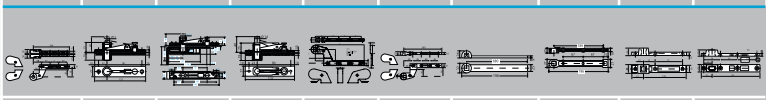									
Material	Steel	Zamac	Zamac	Steel	Steel	Steel	Brass	Steel	Steel	Steel
Adjustment			Adjust-able							
Max. Door Wt.					≤300kg		≤100kg	≤170kg	≤300kg	
Spindle type					Square type	Flat-conical	Square type			Flat-conical
	MA038400 - Silver MA038430 - Black	MA0008S0	MA0118S0	MA0375S0	MA058300 - Silver MA058330 - Black	MA039200 - Silver MA039230 - Black	MA0002S0	MA0213S0	MA0115S0	MA0393S0

Cover plates in Polished Brass, Satin Satinless Steel and Polished Satinless Steel:

Floor Spring - AF600 Series

ASSA ABLOY

Floor Spring with Cam Motion® technology and fixed closing force for very thin slabs

- Floor spring with double action
- Floor spring with power fixed size 3, 4, 5, 6
- Maximum door weight 300kg

Characteristics of AF600 Series:

- Double action floor spring
- Cast iron body
- Dual valve adjusting, closing and latching speed
- Maximum opening angle in each direction of 130°
- Applicable for timber, glass and aluminum door
- Power fixed size 3 / 4 / 5 / 6
- Standard spindle included is 10mm
- Hot zinc plated steel
- Satin stainless steel (Standard) - US32D
- Optional Polished stainless steel - US32
- Adjustment within cement box
- Height 4mm adjustment
- Width 6mm adjustment
- Left to right 10mm adjustment
- Max. weight of door: 300kg

CE EN 1154

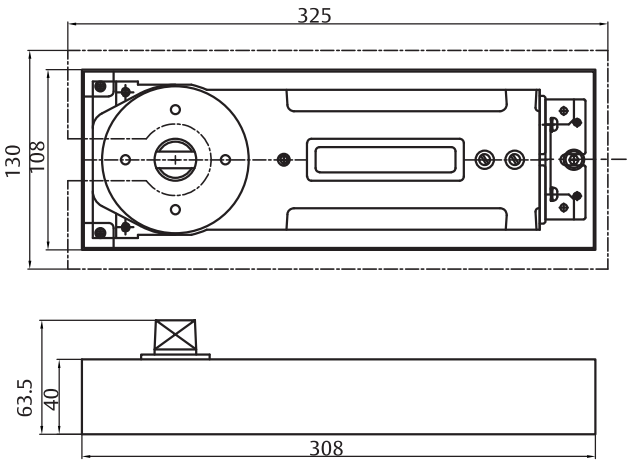

Floor Spring

AF600 Series

Technical details:	AF603	AF604	AF605	AF606
Fixed closing force	3	4	5	6
Door width up to	950mm	1100mm	1250mm	1400mm
Fire and smoke protection	Yes			
Door weight (max. in kg)	105kg	150kg	200kg	300kg
Hold open 90°	Yes			
Maximum door opening angle	130°			
Closing speed adjustment	Speed 1 (130° - 15°), Speed 2 (15° - 0°)			
Removable spindle	Fixed			
Applicable temperature	-15°C to 45°			
Applicability	Wooden, glass & aluminium door etc. Non-handed			
Weight (kg)	6			
Dimension of cement Box (mm) Length	308mm			
Width	108mm			
Height	40mm			

Patch Fittings

ASSA ABLOY

Experience a safer
and more open world

Patch Fitting

ASSA ABLOY Patch Fittings guideline

Symbols used in this catalogue

- P = Patch Fitting
- L = Patch Lock
- S = Patch Strike

Available Finishes

- Satin Satinless Steel - US32D
- Polished Satinless Steel - US32

Standard & Certification

Tested in an endurance test according EN1154

Technical details

- Maximum door weight 80 kg
- Maximum door width 1100 mm

Recommended torque for fixing screws:

- M6- 10 Nm
- M6- 15 Nm (with 5mm hex drive)
- M8- 20 Nm

Door thickness:

- Glass door thickness 10mm- 12mm

Typical Glass Assemblies

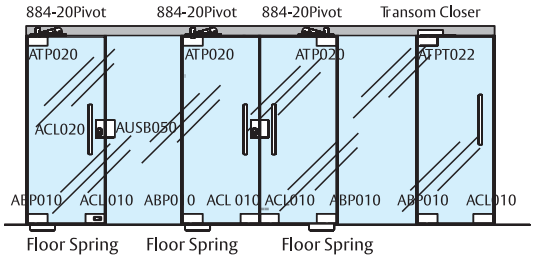

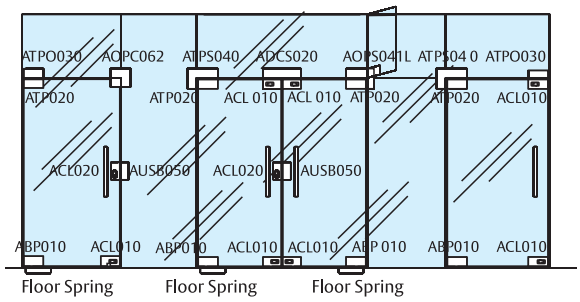

Patch fitting Range

Bottom door patch to suit Floor Springs

Model No.: *ABP - 010*

Description: ASSA ABLOY bottom door patch to suit floor spring

Satin Stainless Steel	ABP-010 US32D
Polish Stainless Steel	ABP-010 US32
Polished Brass	ABP-010 US3
Black Matt	ABP-010 US19

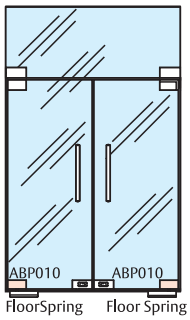

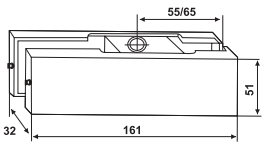

Patch Fitting Range

Top door patch to suit 15mm pivot

Model No.: **ATP - 020**

Part description: ASSA ABLOY top door patch to suit 15mm pivot

Satin Stainless Steel	ATP-020 US32D
Polish Stainless Steel	ATP-020 US32
Polished Brass	ATP-020 US3
Black Matt	ATP-020 US19

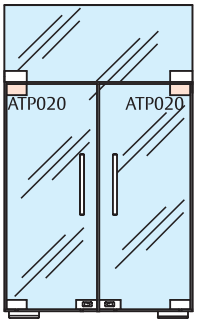

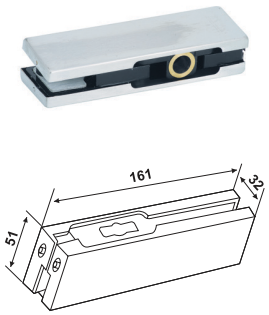

Patch Fitting Range

Top patch to suit transom closer

Model No.: **ATPT - 022**

Part description: ASSA ABLOY top patch to suit transom closer (side load)

Satin Stainless Steel	ATPT-022 US32D
Polish Stainless Steel	ATPT-022 US32
Polished Brass	ATPT-022 US3
Black Matt	ATPT-022 US19

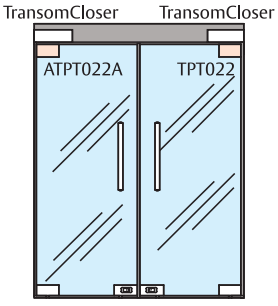

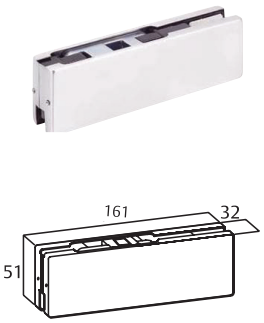

Patch Fitting Range

Top patch for over panel with 15mm pivot

Model No.: **ATPO - 030**

Description: ASSA ABLOY top patch for over panel with 15mm pivot without plate

Satin Stainless Steel	ATPO-030 US32D
Polish Stainless Steel	ATPO-030 US32
Polished Brass	ATPO-030 US3
Black Matt	ATPO-030 US19

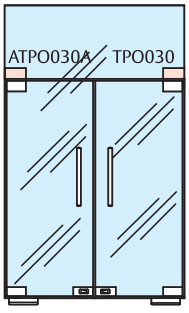

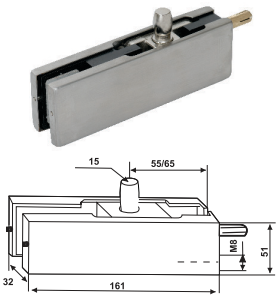

Patch Fitting Range

Over panel patch with 15mm pivot with fixing plate

Model No.: ATPS - 035

Description: ASSA ABLOY over panel patch with 15mm pivot with fixing plate

Satin Stainless Steel	ATPS-035 US32D
Polish Stainless Steel	ATPS-035 US32
Polished Brass	ATPS-035 US3
Black Matt	ATPS-035 US19

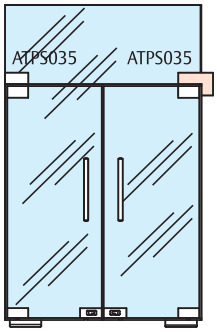

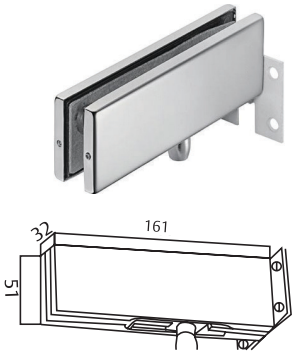

Patch Fitting Range

Top patch for over & side panel with 15mm pivot

Model No.: ATPS - 040

Description: ASSA ABLOY top patch for over and side panel with 15mm pivot

Satin Stainless Steel	ATPS-040 US32D
Polish Stainless Steel	ATPS-040 US32
Polished Brass	ATPS-040 US3
Black Matt	ATPS-040 US19

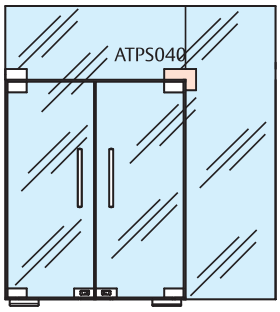

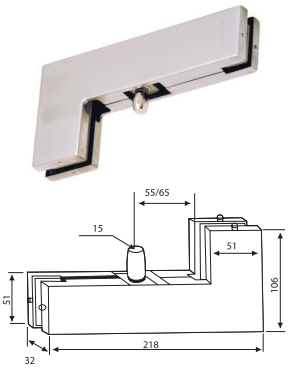

Patch Fitting Range

Patch for over panels, side panel with fin fitting (handed left or right)

Model No.: AOPS - 041L

Description: ASSA ABLOY Patch for over panel, side panel with fin fitting left handed

Satin Stainless Steel	AOPS-041L US32D
Polish Stainless Steel	AOPS-041L US32
Polished Brass	AOPS-041L US3
Black Matt	AOPS-041L US19

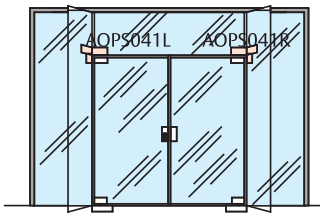

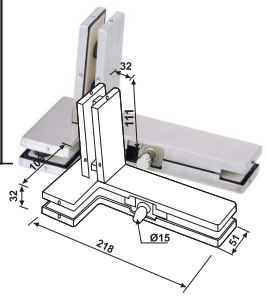

Model No.: AOPS - 41R

Description: ASSA ABLOY Patch for over panel, side panel with fin fitting right handed

Satin Stainless Steel	AOPS-041R US32D
Polish Stainless Steel	AOPS-041R US32
Polished Brass	AOPS-041R US3
Black Matt	AOPS-041R US19

Patch Fitting Range

Connector for over and side panel patch

Model No.: ***AOPC - 060***

Description: ASSA ABLOY Connector for over panel and side panel for double or single swing doors (with stop)

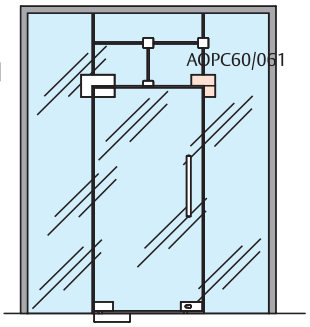

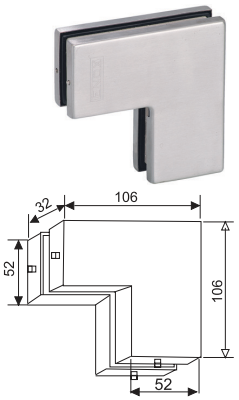

Satin Stainless Steel	AOPC-060 US32D
Polish Stainless Steel	AOPC-060 US32
Polished Brass	AOPC-060 US3
Black Matt	AOPC-060 US19

Model No.: ***AOPC - 061***

Description: ASSA ABLOY over panel and side panel for double or single swing doors

Satin Stainless Steel	AOPC-061 US32D
Polish Stainless Steel	AOPC-061 US32
Polished Brass	AOPC-061 US3
Black Matt	AOPC-061 US19

Patch Fitting Range

Connector for over panel and side panel with stop

Model No.: ***AOPC - 062***

Description: ASSA ABOY Connector for over panel and side panel with stop

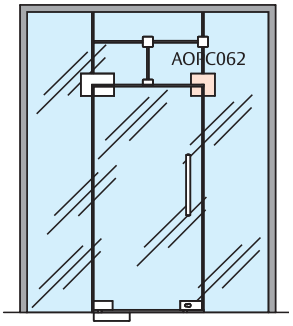

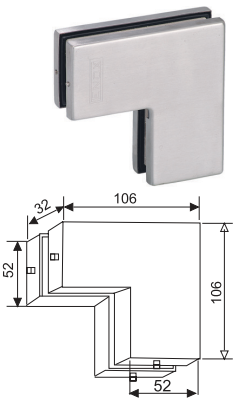

Satin Stainless Steel	AOPC-062 US32D
Polish Stainless Steel	AOPC-062 US32
Polished Brass	AOPC-062 US3
Black Matt	AOPC-062 US19

Patch Fitting Range

Over panel connector with stop inserts

Model No.: ***AOPC - 070***

Description: ASSA ABLOY over panel connector with stop inserts

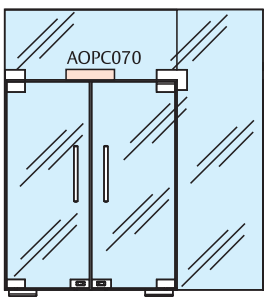

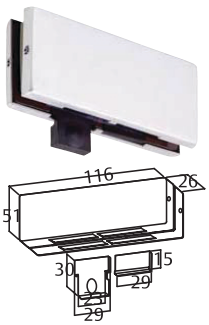

Satin Stainless Steel	AOPC-070 US32D
Polish Stainless Steel	AOPC-070 US32
Polished Brass	AOPC-070 US3
Black Matt	AOPC-070 US19

Patch Fitting Range

Corner lock suit profile cylinder

Model No.: ***ACL - 010***

Description: ASSA ABLOY corner lock suits euro profile cylinder - Bolt has 20mm projection - without cylinder

Satin Stainless Steel	ACL-010 US32D
Polish Stainless Steel	ACL-010 US32
Polished Brass	ACL-010 US3
Black Matt	ACL-010 US19

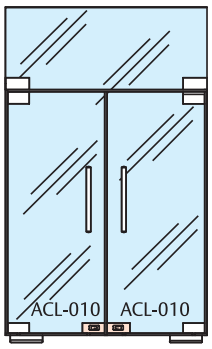

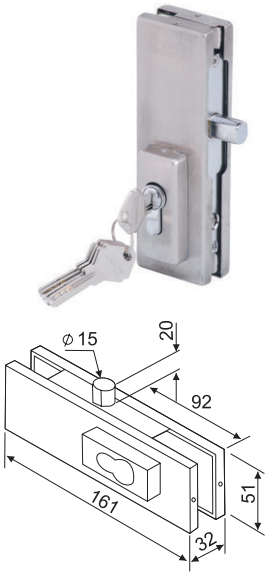

Patch Fitting Range

Centre lock suits euro profile cylinder

Model No.: ***ACL - 020***

Description: ASSA ABLOY centre lock suits euro profile cylinder - Bolt has 20mm projection - without cylinder

Satin Stainless Steel	ACL-020 US32D
Polish Stainless Steel	ACL-020 US32
Polished Brass	ACL-020 US3
Black Matt	ACL-020 US19

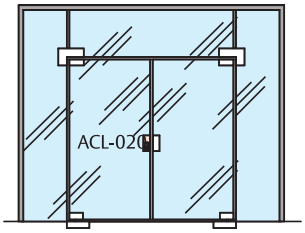

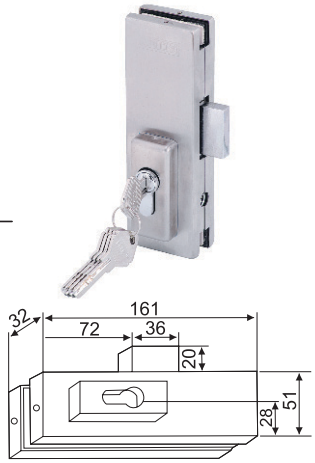

Patch Fitting Range

Double over panel strike box

Model No.: ***ADCS - 020***

Description: ASSA ABLOY double over panel strike box SSS (Suits ***ACL-010*** Corner locks)

Satin Stainless Steel	ADCS-020 US32D
Polish Stainless Steel	ADCS-020 US32
Polished Brass	ADCS-020 US3
Black Matt	ADCS-020 US19

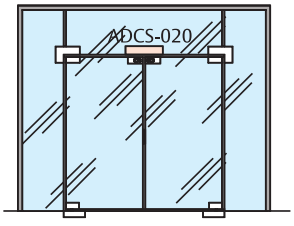

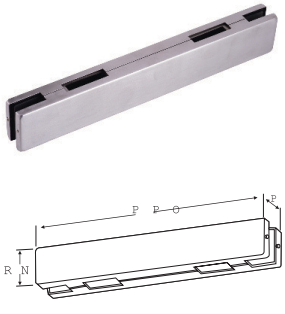

Patch Fitting Range

Universal strike box

Model No.: ***AUSB - 050***

Description: ASSA ABLOY universal strike box (Suits ***ACL-020*** central locks)

Satin Stainless Steel	AUSB-050 US32D
Polish Stainless Steel	AUSB-050 US32
Polished Brass	AUSB-050 US3
Black Matt	AUSB-050 US19

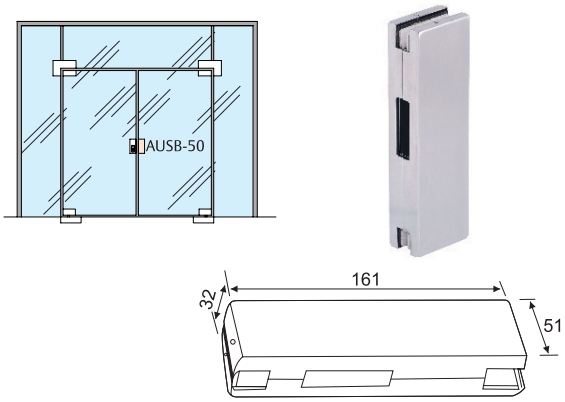

Patch Fitting Range

Corner over and side panel strike box

Model No.: ***AOCS - 040***

Description: ASSA ABLOY corner over and side panel strike box (Suits ***ACL-010*** corner locks)

Satin Stainless Steel	AOCS-040 US32D
Polish Stainless Steel	AOCS-040 US32
Polished Brass	AOCS-040 US3
Black Matt	AOCS-040 US19

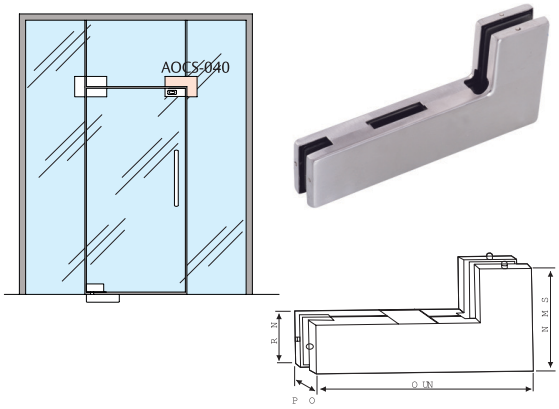

Patch Fitting Range

Single over panel strike box

Model No.: ***ASCS - 030***

Description: ASSA ABLOY Single over panel strike box SSS (Suits ***ACL-010*** corner locks)

Satin Stainless Steel	ASCS-030 US32D
Polish Stainless Steel	ASCS-030 US32
Polished Brass	ASCS-030 US3
Black Matt	ASCS-030 US19

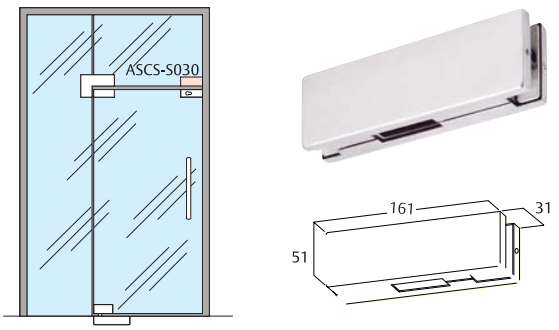

Patch Fitting Range

Accessories
Top pivot

Model No.: ***ATLG 502-15***

Description: ASSA ABLOY top pivot 15mm dia suitable for wooden, metal, aluminium frame

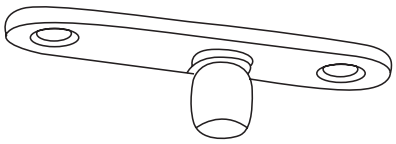

Satin Stainless Steel	ATLG 502-15 US32D

Patch Fitting Range

Accessories
Bottom pivot

Model No.: ***985-35***

Description: ASSA ABLOY heavy duty bottom pivot. (200kg door maximum)
Suits P010 - Bottom door patch and bottom strap for wooden door

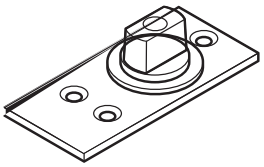

Satin Stainless Steel	985-35 US32D

Patch Fitting Range

Typical installation details

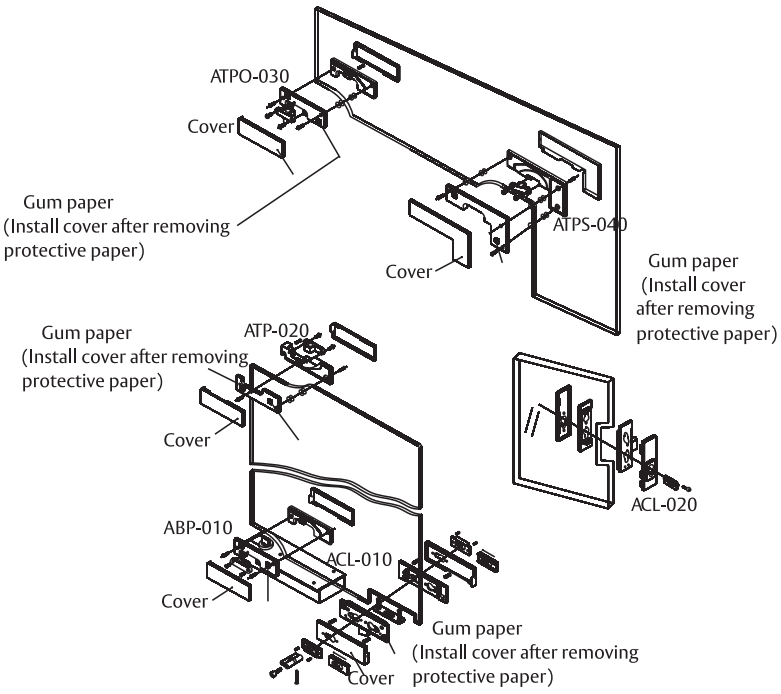

Pull Handle

ASSA ABLOY

Experience a safer
and more open world

Features & Benefits

Pull Handle

Features:
- Made of SS 304
- Exclusive range
- Concealed mounting

Benefits:
- High corrosion resistance
- High durability
- Choice of design
- Suitable for external environment

Compliance to BS8424:2003

Technical details:
- Tubular Pull Handle
- Door thickness
  30mm to 50mm - Timber & Metal door
  10mm - 12mm - Glass door
- Spindle - 8mm x 8mm
- Available length (CTC): 350 - 1500
- Back-to-back fixing
- Optional one side fixing
- Optional extended spindle
- Finish SSS - US32D, PSS - US32

ASSA ABLOY Pull Handles are manufactured using the finest materials to incorporate the maximum standards in style, durability, finish and design.

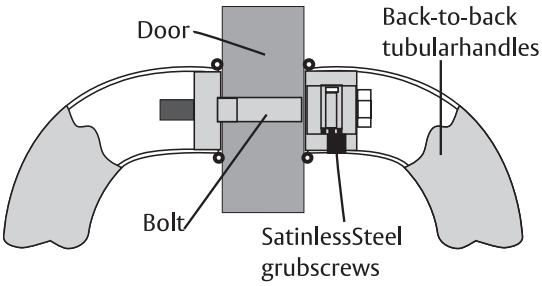

Pull Handle

AEH - 01 Series

Model No.: ***AEH - 01***

Description: ASSA ABLOY H - Type tubular pull handle
Back-to-back mount
Door thickness: 12mm Glass, 38- 50mm, Aluminium and Timber
(Please specify)

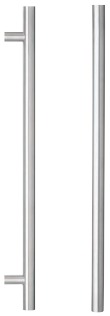

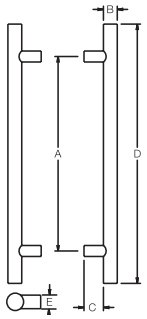

Satin Satinless Steel - US32D (Standard)

Art. No.	A	B	C	D	E
AEH-01 US32D	350mm	25mm	45mm	450mm	25mm
AEH-01A* US32D	450mm	32mm	45mm	600mm	25mm
AEH-01B* US32D	600mm	32mm	45mm	750mm	25mm
AEH-01C* US32D	900mm	32mm	45mm	1050mm	25mm
AEH-01D US32D	1200mm	32mm	45mm	1350mm	25mm
AEH-01E US32D	1500mm	32mm	45mm	1650mm	25mm

Polished Satinless Steel - US32 (Option)

Art. No.	A	B	C	D	E
AEH-01 US32	350mm	25mm	45mm	450mm	25mm
AEH-01A* US32	450mm	32mm	45mm	600mm	25mm
AEH-01B* US32	600mm	32mm	45mm	750mm	25mm
AEH-01C* US32	900mm	32mm	45mm	1050mm	25mm
AEH-01D US32	1200mm	32mm	45mm	1350mm	25mm
AEH-01E US32	1500mm	32mm	45mm	1650mm	25mm

Pull Handle

AEH - 02 Series

Model No.: ***AEH - 02***

Description: ASSA ABLOY D - Type square pull handle
Back-to-back mount
Door thickness: 12mm Glass, 38- 50mm
Aluminium and Timber
(Please specify)

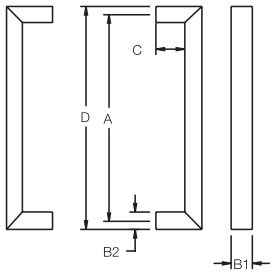

Satin Satinless Steel - US32D (Standard)

Art. No.	A	B1	B2	C	D
AEH-02A* US32D	450mm	38mm	25mm	60mm	475mm
AEH-02B* US32D	600mm	38mm	25mm	60mm	625mm
AEH-02D US32D	1200mm	38mm	25mm	60mm	1225mm
AEH-02E US32D	1500mm	38mm	25mm	60mm	1525mm

Polished Satinless Steel - US32 (Option)

Art. No.	A	B1	B2	C	D
AEH-02A* US32	450mm	38mm	25mm	60mm	475mm
AEH-02B* US32	600mm	38mm	25mm	60mm	625mm
AEH-02D US32	1200mm	38mm	25mm	60mm	1225mm
AEH-02E US32	1500mm	38mm	25mm	60mm	1525mm

Pull Handle

AEH - 04 Series

Model No.: ***AEH - 04***

Description: ASSA ABLOY D - Type square offset pullhandle
Back-to-back mount
Door thickness: 12mm Glass, 38- 50mm
Aluminium and Timber (Please specify)

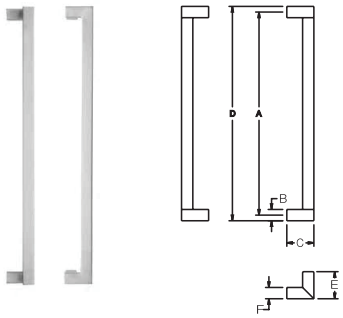

Satin Satinless Steel - US32D (Standard)

Art. No.	A	B	C	D	E	F
AEH-04A US32D	450mm	25mm	60mm	475mm	60mm	25mm
AEH-04B US32D	600mm	25mm	60mm	625mm	60mm	25mm
AEH-04C US32D	900mm	25mm	60mm	925mm	60mm	25mm
AEH-04D US32D	1200mm	25mm	60mm	1225mm	60mm	25mm
AEH-04E US32D	1500mm	25mm	60mm	1525mm	60mm	25mm

Polished Satinless Steel - US32 (Option)

Art. No.	A	B	C	D	E	F
AEH-04A US32	450mm	25mm	60mm	475mm	60mm	25mm
AEH-04B US32	600mm	25mm	60mm	625mm	60mm	25mm
AEH-04C US32	900mm	25mm	60mm	925mm	60mm	25mm
AEH-04D US32	1200mm	25mm	60mm	1225mm	60mm	25mm
AEH-04E US32	1500mm	25mm	60mm	1525mm	60mm	25mm

Pull Handle

AEH - 07 Series

Model No.: ***AEH - 07***
Modelt
Description: ASSA ABLOY H - Type square pullhandle
Back-to-back mount
Door thickness: 12mm Glass, 38 ~50mm
Aluminium and Timber (Please specify)

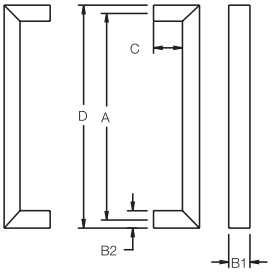

Satin Satinless Steel - US32D (Standard)

Art. No.	A	B1	B2	C	D
AEH-07A1 US32D	450mm	25mm	25mm	50mm	475mm
AEH-07B US32D	1100mm	25mm	25mm	50mm	1125mm
AEH-07C US32D	1200mm	25mm	25mm	50mm	1225mm

Polished Satinless Steel - US32 (Option)

Art. No.	A	B1	B2	C	D
AEH-07A1 US32	450mm	25mm	25mm	50mm	475mm
AEH-07B US32	1100mm	25mm	25mm	50mm	1125mm
AEH-07C US32	1200mm	25mm	25mm	50mm	1225mm

Pull Handles

ADP-01
ADP-02
ADP-03
ADP-03C

Model No.: ***ADP-01, ADP-02, ADP-03***

Description: Single side D Pull SSS (without cover)
ADP-01 - 100 x 10mm
ADP-02 - 150 x 19mm
ADP-03 - 200 x 19mm

Art. No.	Height	Dia.
ADP-01 US32D	100mm	10mm
ADP-02 US32D	150mm	19mm
ADP-03 US32D	200mm	19mm

Model No.: ***ADP-03C***

Description: Single side D Pull SSS (with cover)
ADP-03C - 200 x 19mm

Art. No.	Height	Dia.
ADP-03C US32D	200mm	19mm

Shower Hardware

ASSA ABLOY

Experience a safer
and more open world

Features & Benefits

Lockcase and Hinges

Key features:
- High quality finish
- Quiet and smooth
- Complete sealing
- Longer life cycle

Benefits:
- Aesthetic design
- Great user comfort
- High corrosion resistance
- Easy maintenance

Standard & Certifications

EN1935 Compliance

Technical details:
- Suits 6mm to 12mm glass door width
- Maximum weight 50kg with 2 hinges
- PVC Sealing
- Non-handed
- Protection against cold, draught, moisture

Shower Hinge Wall to Glass 90°

Model No.: ***AWGR - 01***

Description: Shower Hinges Wall to Glass 90°- Round Edge

Material	*Door weight*	*Glass thickness*
Brass	Max. 50kg	8mm to 12mm

Bright Chrome Plated	AWGR-01 US26
Polished Brass	AWGR-01 US3
Black Matt	AWGR-01 US19

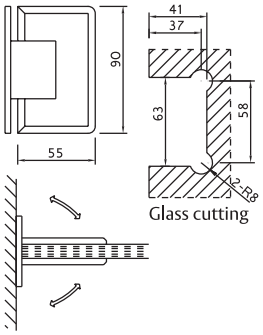

Shower Hinge Wall to Glass 90°

Model No.: ***AWGR - 02***

Description: Shower Hinges Wall to Glass 90°- Round Edge

Material	*Door weight*	*Glass thickness*
Brass	Max. 50kg	8mm to 12mm

Bright Chrome Plated	AWGR-02 US26
Polished Brass	AWGR-02 US3
Black Matt	AWGR-02 US19

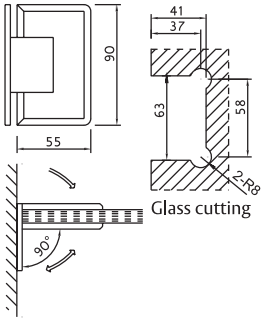

Shower Hinge Wall to Glass 135°

Model No.: ***AWGR - 03***

Description: Shower Hinge Wall to Glass 135°- Round Edge

Material	*Door weight*	*Glass thickness*
Brass	Max. 50kg	8mm to 12mm

Bright Chrome Plated	AWGR-03 US26
Polished Brass	AWGR-03 US3
Black Matt	AWGR-03 US19

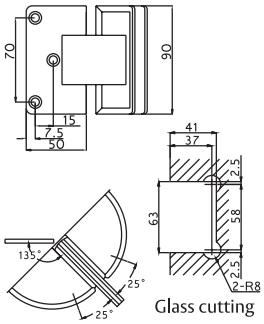

Shower Hinge Glass to Glass 180°

Model No.: AGGR-01

Description: Shower Hinges Glass to Glass 180° - Round Edge

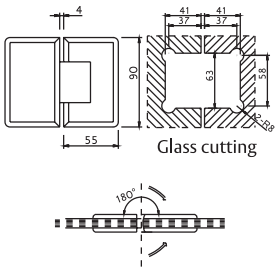

Material	Door weight	Glass thickness
Brass	Max. 50kg	8mm to 12mm

Bright Chrome Plated	AGGR-01 US26
Polished Brass	AGGR-01 US3
Black Matt	AGGR-01 US19

Shower Hinge Glass to Glass 135°

Model No.: AGGR-02

Description: Shower Hinges Glass to Glass 135° - Round Edge

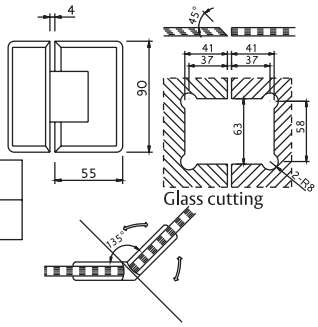

Material	Door weight	Glass thickness
Brass	Max. 50kg	8mm to 12mm

Bright Chrome Plated	AGGR-02 US26
Polished Brass	AGGR-02 US3
Black Matt	AGGR-02 US19

Shower Hinge Glass to Glass 90°

Model No.: AGGR-03

Description: Shower Hinges Glass to glass 90° - Round Edge

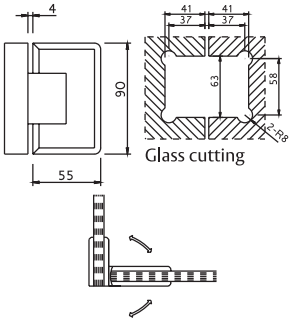

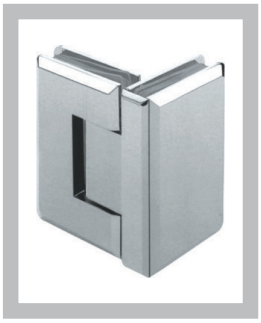

Material	Door weight	Glass thickness
Brass	Max. 50kg	8mm to 12mm

Bright Chrome Plated	AGGR-03 US26
Polished Brass	AGGR-03 US3
Black Matt	AGGR-03 US19

Shower Clamp Wall to Glass 90°

Model No.: ***AWGB-01R***

Description: Shower Clamp Wall to Glass 90° - Round Edge

Material	Door weight	Glass thickness
Brass	Max. 50kg	8mm to 12mm

Bright Chrome Plated	AWGB-01R US26
Polished Brass	AWGB-01R US3
Black Matt	AWGB-01R US19

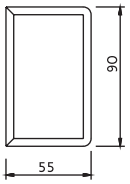

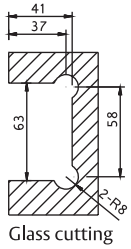

Glass cutting

Shower Clamp Wall to Glass 90°

Model No.: ***AWGB-02R***

Description Shower Clamp Wall to Glass 90° - Round Edge

Material	Door weight	Glass thickness
Brass	Max. 50kg	8mm to 12mm

Bright Chrome Plated	AWGB-02R US26
Polished Brass	AWGB-02R US3
Black Matt	AWGB-02R US19

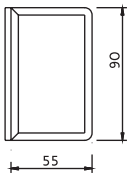

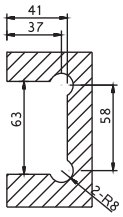

Glass cutting

Shower Clamp Wall to Glass 90°

Model No.: ***AWGB-03R***

Description Shower Clamp Wall to Glass 90° - Round Edge

Material	Door weight	Glass thickness
Brass	Max. 50kg	8mm to 12mm

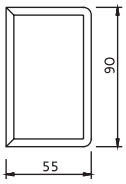

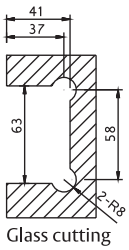

Glass cutting

Shower Hinge Wall to Glass 90° double plate

Model No.: **AWGS-01**

Description: Shower Hinge
Wall to Glass 90° - Straight Edge

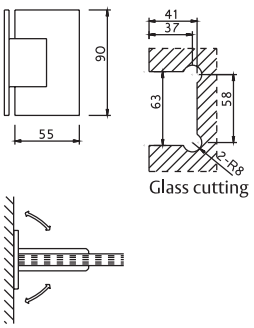

Material	*Door weight*	*Glass thickness*
Brass	Max. 50kg	8mm to 12mm

Bright Chrome Plated	AWGS-01 US26
Polished Brass	AWGS-01 US3
Black Matt	AWGS-01 US19

Shower Hinge Wall to Glass 90° single plate

Model No.: **AWGS-02**

Description: Shower Hinge
Wall to Glass 90° - Straight Edge

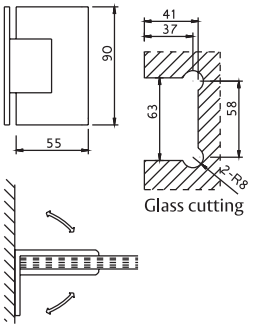

Material	*Door weight*	*Glass thickness*
Brass	Max. 50kg	8mm to 12mm

Bright Chrome Plated	AWGS-02 US26
Polished Brass	AWGS-02 US3
Black Matt	AWGS-02 US19

Shower Hinge Glass To Glass 180°

Model No.: **AGGS-01**

Description: Shower Clamp Hinge Glass to Glass 180°- Straight Edge

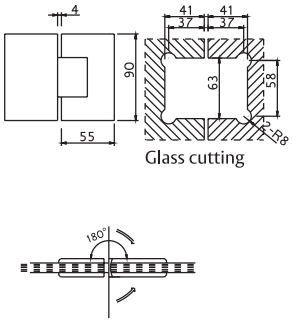

Material	*Door weight*	*Glass thickness*
Brass	Max. 50kg	8mm to 12mm

Bright Chrome Plated	AGGS-01 US26
Polished Brass	AGGS-01 US3
Black Matt	AGGS-01 US19

Shower Hinge Glass to Glass 135°

Model No.: *AGGS-02*

Description: Shower Hinge Glass to Glass 135°- Straight Edge

Material	Door weight	Glass thickness
Brass	Max. 50kg	8mm to 12mm

Bright Chrome Plated	AGGS-02 US26
Polished Brass	AGGS-02 US3
Black Matt	AGGS-02 US19

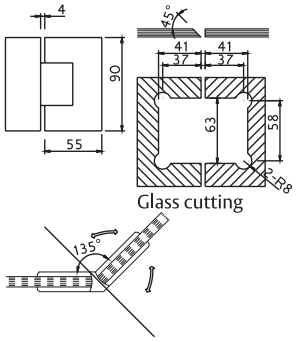

Shower Hinge Glass to Glass 90°

Model No.: *AGGS-03*

Description: Shower Hinge Glass to Glass 90°- Straight Edge

Material	Door weight	Glass thickness
Brass	Max. 50kg	8mm to 12mm

Bright Chrome Plated	AGGS-03 US26
Polished Brass	AGGS-03 US3
Black Matt	AGGS-03 US19

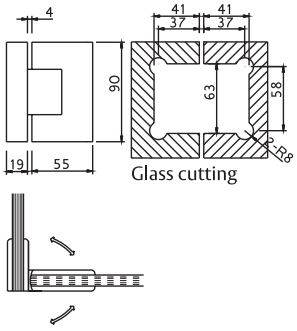

Shower Clamp Glass to Glass 90°

Model No.: *AWGB-01S*

Description: Shower Clamp Wall to Glass 90°- Straight Edge

Material	Door weight	Glass thickness
Brass	Max. 50kg	8mm to 12mm

Bright Chrome Plated	AWGB-01S US26
Polished Brass	AWGB-01S US3
Black Matt	AWGB-01S US19

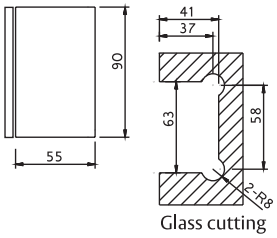

Shower Clamp Wall to Glass 90° with back plate

Model No.: ***AWGB-02S***

Description: Shower Clamp Wall to Glass 90°- Straight Edge

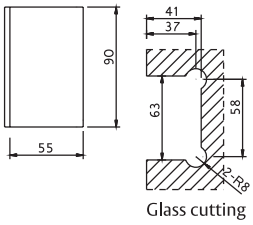

Material	*Door weight*	*Glass thickness*
Brass	Max. 50kg	8mm to 12mm

Bright Chrome Plated	AWGB-02S US26
Polished Brass	AWGB-02S US3
Black Matt	AWGB-02S US19

Glass Connector Wall to Glass 90°

Model No.: ***AGCR-01***

Description: Glass Connector Wall to Glass 90° - Round Edge

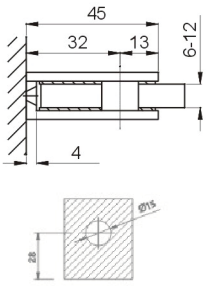

Material	*Door weight*	*Glass thickness*
Brass	Max. 50kg	8mm to 12mm

Bright Chrome Plated	AGCR-01 US26
Polished Brass	AGCR-01 US3
Black Matt	AGCR-01 US19

Glass Connector Wall to Glass 90°

Model No.: ***AGCR-02***

Description: Glass Connector Wall to Glass 90° - Round Edge

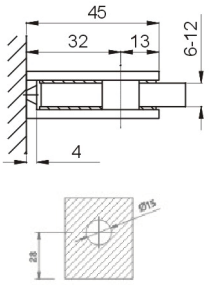

Material	*Door weight*	*Glass thickness*
Brass	Max. 50kg	8mm to 12mm

Bright Chrome Plated	AGCR-02 US26
Polished Brass	AGCR-02US3
Black Matt	AGCR-02 US19

Glass Connector Wall to Glass 90° with L shape plate

Model No.: **AGCR-03**

Description: Glass Connector
Wall to Glass 90° - Round Edge

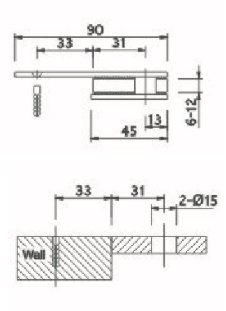

Material	Door weight	Glass thickness
Brass	Max. 50kg	8mm to 12mm

Bright Chrome Plated	AGCR-03 US26
Polished Brass	AGCR-03 US3
Black Matt	AGCR-03 US19

Glass Connector Glass to glass 180°

Model No.: **AGCR-04**

Description: Glass Connector
Glass to Glass 180° - Round Edge

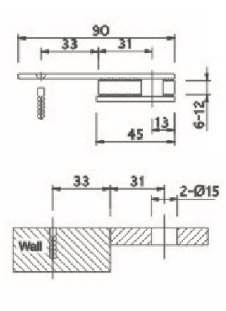

Material	Door weight	Glass thickness
Brass	Max. 50kg	8mm to 12mm

Bright Chrome Plated	AGCR-04 US26
Polished Brass	AGCR-04 US3
Black Matt	AGCR-04 US19

Glass Connector Glass to glass 180°

Model No.: **AGCR-05**

Description: Glass Connector
Glass to Glass 180° - Round Edge

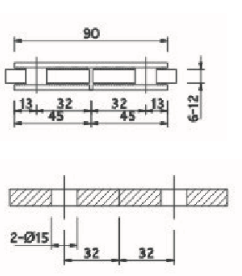

Material	Door weight	Glass thickness
Brass	Max. 50kg	8mm to 12mm

Bright Chrome Plated	AGCR-05 US26
Polished Brass	AGCR-05 US3
Black Matt	AGCR-05US19

Glass Connector Glass to Glass 90°

Model No.: **AGCR-06**

Description: Glass Connector Glass to Glass 90° - Round Edge

Material	Door weight	Glass thickness
Brass	Max. 50kg	8mm to 12mm

Bright Chrome Plated	AGCR-06 US26
Polished Brass	AGCR-06 US3
Black Matt	AGCR-06 US19

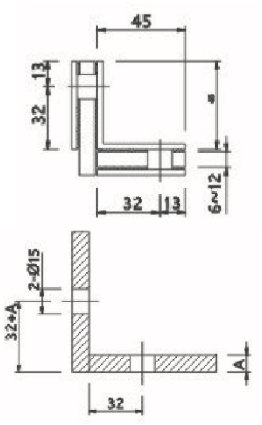

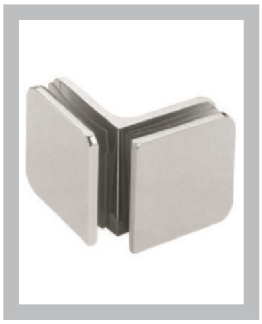

Glass Connector Glass to Glass 135°

Model No.: **AGCR-07**

Description: Glass Connector Glass to Glass 135° - Round Edge

Material	Door weight	Glass thickness
Brass	Max. 50kg	8mm to 12mm

Bright Chrome Plated	AGCR-07 US26
Polished Brass	AGCR-07 US3
Black Matt	AGCR-07 US19

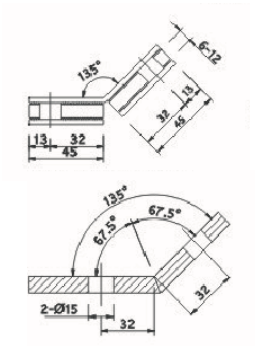

Glass Connector Wall to Glass 90°

Model No.: **AGCS-01**

Description: Glass Connector Wall to Glass 90° - Straight Edge

Material	Door weight	Glass thickness
Brass	Max. 50kg	8mm to 12mm

Bright Chrome Plated	AGCS-01 US26
Polished Brass	AGCS-01 US3
Black Matt	AGCS-01 US19

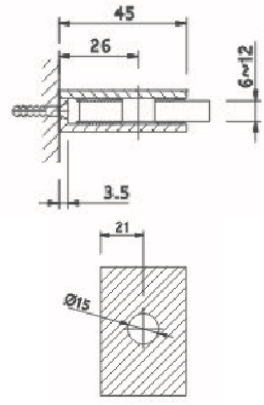

Glass Connector Wall to Glass 90°

Model No.: **AGCS-02**

Description: Glass Connector Wall to Glass 90° - Straight Edge

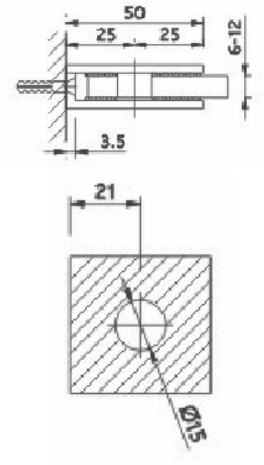

Material	Door weight	Glass thickness
Brass	Max. 50kg	8mm to 12mm

Bright Chrome Plated	AGCS-02 US26
Polished Brass	AGCS-02 US3
Black Matt	AGCS-02 US19

Glass Connector Wall to Glass 90°

Model No.: **AGCS-03**

Description: Glass Connector Wall to Glass 90° - Straight Edge

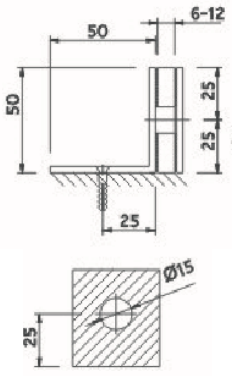

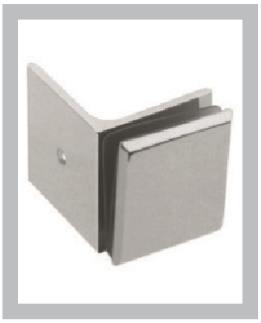

Material	Door weight	Glass thickness
Brass	Max. 50kg	8mm to 12mm

Bright Chrome Plated	AGCS-03 US26
Polished Brass	AGCS-03 US3
Black Matt	AGCS-03 US19

Glass Connector Wall to Glass 180°

Model No.: **AGCS-04**

Description: Glass Connector Wall to Glass 180° - Straight Edge

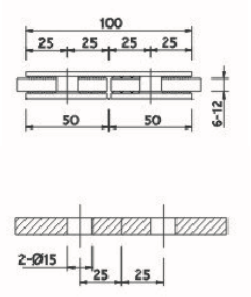

Material	Door weight	Glass thickness
Brass	Max. 50kg	8mm to 12mm

Bright Chrome Plated	AGCS-04 US26
Polished Brass	AGCS-04 US3
Black Matt	AGCS-04 US19

Glass Connector Glass to Glass 180°

Model No.: **AGCS-05**

Description: Glass Connector Glass to Glass 180° - Straight Edge

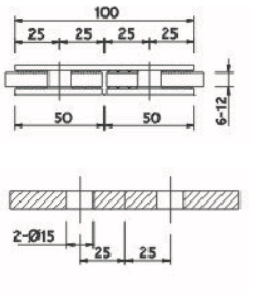

Material	Door weight	Glass thickness
Brass	Max. 50kg	8mm to 12mm

Bright Chrome Plated	AGCS-05 US26
Polished Brass	AGCS-05 US3
Black Matt	AGCS-05 US19

Glass Connector Glass to Glass 90°

Model No.: **AGCS-06**

Description: Glass Connector Glass to Glass 90° - Straight Edge

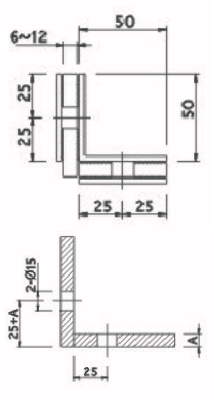

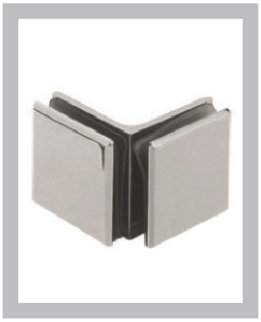

Material	Door weight	Glass thickness
Brass	Max. 50kg	8mm to 12mm

Bright Chrome Plated	AGCS-06 US26
Polished Brass	AGCS-06 US3
Black Matt	AGCS-06 US19

Glass Connector Glass to Glass 135°

Model No.: **AGCS-07**

Description: Glass Connector Glass to Glass 135° - Straight Edge

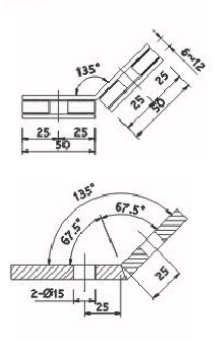

Material	Door weight	Glass thickness
Brass	Max. 50kg	8mm to 12mm

Bright Chrome Plated	AGCS-07 US26
Polished Brass	AGCS-07 US3
Black Matt	AGCS-07 US19

Shower Door Pull Handle

Description: Shower Door Pull Handle

Finish: Polished Stainless Steel - US32

Size	Art. No.:
19x200x450	ASH101/19/200x450 US32
19x250x450	ASH101/19/250x450 US32
25x200x450	ASH101/25/200x450 US32
25x250x450	ASH101/25/250x450 US32

Shower Door Pull Handle

Description: Shower Door Pull Handle

Finish: Polished Stainless Steel - US32

Size	Art. No.:
19x150	ASH111/19/150 US32
19x200	ASH111/19/200 US32
19x250	ASH111/19/250 US32
19x300	ASH111/19/300 US32
25x250	ASH111/25/250 US32
25x300	ASH111/25/300 US32

Shower Door Pull Handle

Description: Shower Door Pull Handle

Finish: Polished Stainless Steel - US32

Size	Art. No.:
20x20x200	ASH115/20/200
20x20x250	ASH115/20/250
20x20x300	ASH115/20/300
20x20x450	ASH115/20/350

Shower Door Pull Handle

Description: Shower Door Pull Handle

Finish: Polished Stainless Steel - US32

Size	Art. No.:
19x200x450	ASH117/19/200x450 US32
19x250x450	ASH117/19/250x450 US32
19x200x450	ASH117/25/200x450 US32
19x250x450	ASH117/25/250x450 US32

Shower Door Knob

Art. No.: ***ASK102 US26***
Description: Shower Door Knob

Finish: Bright Chrome Plated - US26

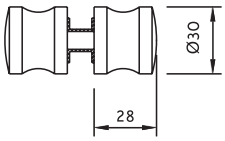

Shower Door Knob

Art. No.: ***ASK105 US26***
Description: Shower Knob

Finish: Bright Chrome Plated - US26

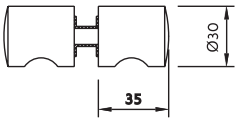

Glass Seal

General Information:

- Multi-function Seal Strip: Seal gap, effectively prevent water from overflowing in the bathroom and keep the bathroom clean.
- High-Quality PVC Seal Strip: Made of high-quality transparent silica gel and environmentally friendly.
- Easy To Install: Adjust it to the required length with scissors, wipe the glass door, and stick the sealing ring on a clean surface.
- Wide Range Of Sealing Strips: Suitable for shower doors, sliding doors, sliding doors, glass doors, door bottoms, suitable for 10 or 12mm frameless glass.
- Suitable Length: 2.4m length, to meet all the needs of the bottom and side of a door.

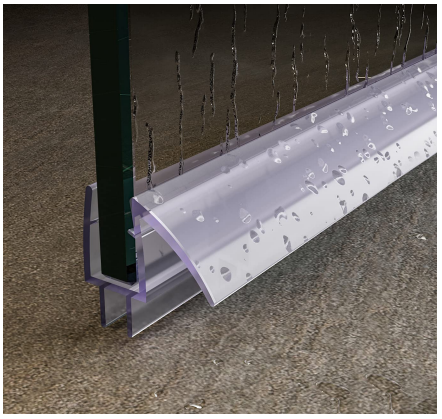

Glass Seal
Glass to Glass

Art. No.: ***AMS11-8-10, AMS11-10-12***

Description: Shower Seal
Glass to Glass

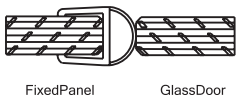

Glass thickness	Material	Art. No.
8 - 10mm	PVC	AMS11-8-10
10 - 12mm	PVC	AMS11-10-12

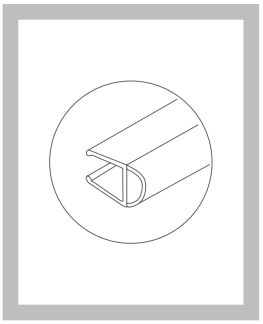

Glass Seal
Glass to Glass

Model No.: ***ACS2-8-10, ACS2-10-12***

Description: Shower Seal
Glass to Glass

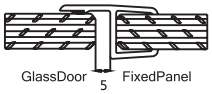

Glass thickness	Material	Art. No.
8 - 10mm	PVC	ACS2-8-10
10 - 12mm	PVC	ACS2-10-12

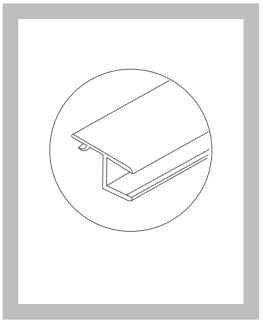

Glass seal
Glass to Glass

Model No.: ***ACS2B-8-10, ACS2B-10-12***

Description: Shower Seal
Glass to Glass

Glass thickness	Material	Art. No.
8mm to 10mm	PVC	ACS2B-8-10
10mm to 12mm	PVC	ACS2B-10-12

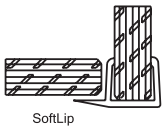

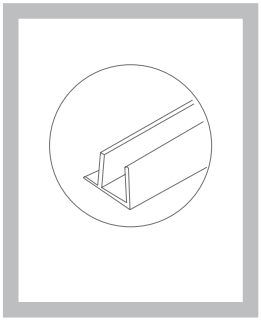

Glass seal
Glass to Glass

Model no.: ***ACS2R-8-10, ACS2R-10-12***

Description: Shower Seal
Glass to Glass

Glass thickness	Material	Art. No.
8mm to 10mm	PVC	ACS2R-8-10
10mm to 12mm	PVC	ACS2R-10-12

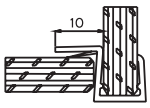

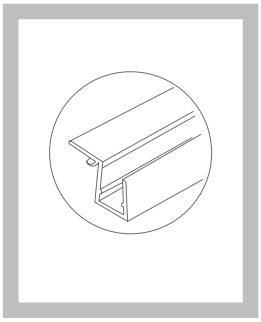

Glass seal
Glass to Glass 135°
Seal

Model no.: ***ACS3-8-10, ACS3-10-12***

Description: Shower Seal
Glass to Glass

Glass thickness	Material	Art. No.
8mm to 10mm	PVC	ACS3-8-10
10mm to 12mm	PVC	ACS3-10-12

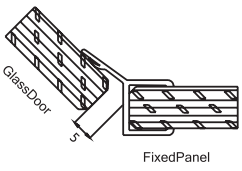

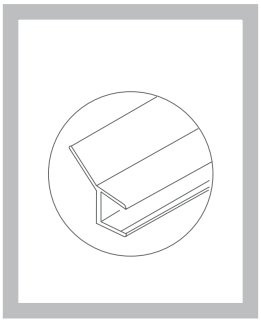

Glass Seal
Glass to Wall Seal

Model no.: **ACS4-8-10, ACS4-10-12**

Description: Shower Seal
Glass to Wall Seal

Glass thickness	Material	Art. No.
8mm to 10mm	PVC	ACS4-8-10
10mm to 12mm	PVC	ACS4-10-12

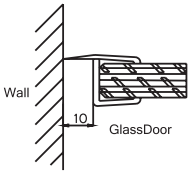

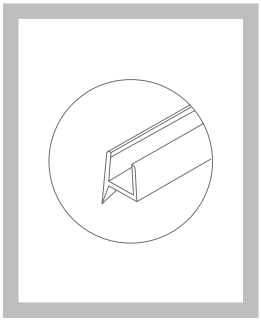

Glass seal
Glass to Glass

Model no.: **ACS5-8-10, ACS5-10-12**

Description: Shower Seal
Glass to Glass

Glass thickness	Material	Art. No.
8mm to 10mm	PVC	ACS5-8-10
10mm to 12mm	PVC	ACS5-10-12

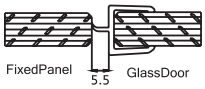

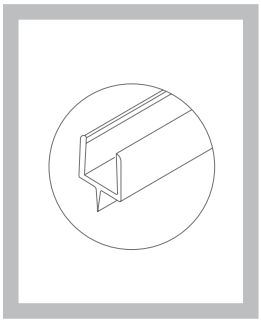

Glass seal
Glass to Floor Water Dispenser Seal

Model no.: **ACS6-8-10, ACS6-10-12**

Description: Shower Seal
Glass To Floor Water Dispenser Seal

Glass thickness	Material	Art. No.
8mm to 10mm	PVC	ACS6-8-10
10mm to 12mm	PVC	ACS6-10-12

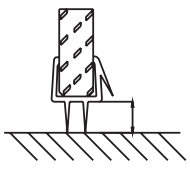

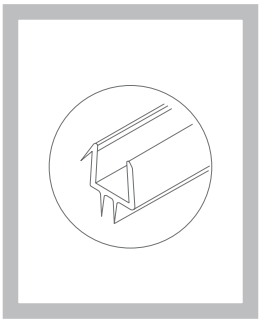

Glass seal Glass to Glass 135° Magnetic Seal

Model no.: *AMS8-8-10, AMS8-10-12*

Description: Shower Seal
Glass to Glass 135° Magnetic Seal

Glass thickness	Material	Art. No.
8mm to 10mm	PVC	AMS8-8-10
10mm to 12mm	PVC	AMS8-10-12

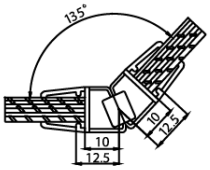

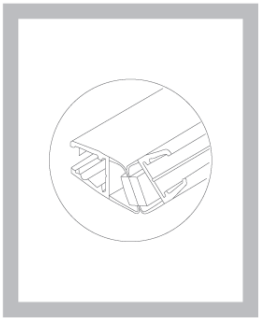

Glass seal Glass to Glass 180° Magnetic Seal

Model no.: *AMS10-8-10, AMS10-10-12*

Description: Shower Seal
Glass to Glass 180° Magnetic Seal

Glass thickness	Material	Art. No.
8mm to 10mm	PVC	AMS9-8-10
10mm to 12mm	PVC	AMS9-10-12

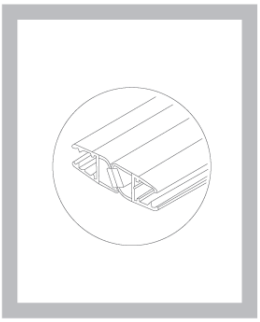

Glass seal Glass to Glass 90° Magnetic Seal

Model no.: *AMS10-8-10, AMS10-10-12*

Description: Shower Seal
Glass to Glass 90° Magnetic Seal

Glass thickness	Material	Art. No.
8mm to 10mm	PVC	AMS10-8-10
10mm to 12mm	PVC	AMS10-10-12

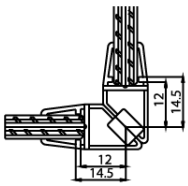

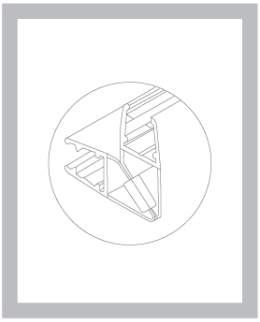

General Hardware

ASSA ABLOY

Experience a safer
and more open world

Features & Benefits

General Hardware

Features:
- Suitable for use in commercial and residential buildings
- A range of general door hardware suitable for most door applications

Benefits:
- Ease of door operations
- Aesthetics and functions
- Safety and security
- Protection of doors and walls

Products:
General hardware range
- Door Stops
- Coat / Robe Hooks
- Door Chains
- Bolts
- Door Viewer
- Barrel Bolts
- Timber and Aluminium Flush Bolts
- Sliding Door Hardware
- Push and Pull Plates

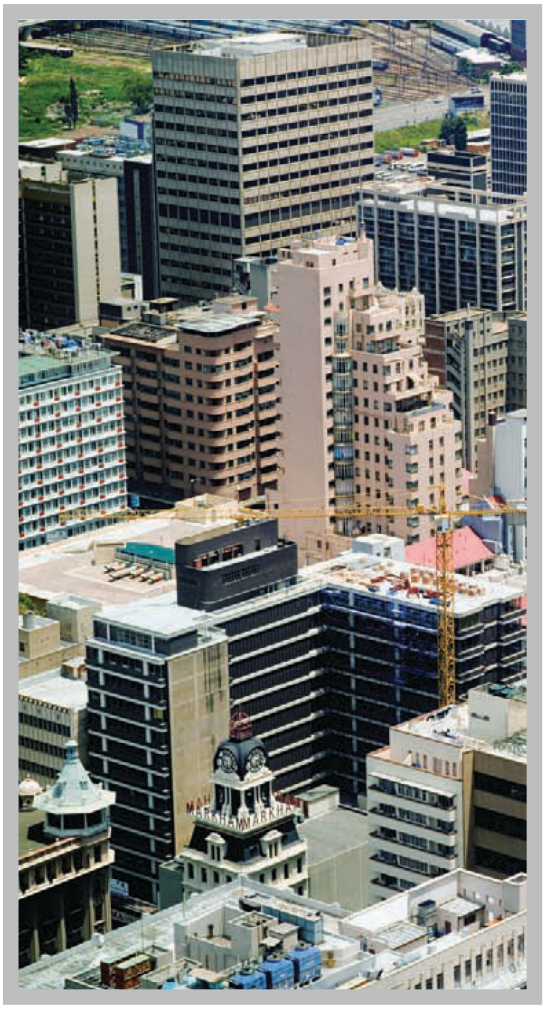

Rectangular Flush Pulls

AFP-01, AFP-02

Art. No.: ***AFP-01 US32D, AFP-02 US32D***

Dimensions: AFP-01 - 120mm x 50mm
AFP-02 - 150mm x 50mm

Finish: Satin Stainless Steel

Square Flush Pulls

AFP-03

Art. No.: ***AFP-03US32D***

Description: AFP-03 - 65mm x 65mm Square concealed Fix Flush

Dimensions: 65mm x 65mm

Finish: Satin Stainless Steel

Radius Flush Pulls

AFP-04

Art. No.: ***AFP -04 US32D***

Description: AFP-04 -65mm diameter round concealed Fix Flush

Dimension: 65mm diameter

Finish: Satin Stainless Steel

Flush Ring Pull

AFP-05

Art. No.: **AFP-05 US32D**

Dimension: 43mm x 63mm

Finish: Satin Stainless Steel

Dome Type Floor Stop

AFS-01

Model No.: **AFS-01**

Description: Floor Door Stop

Dimension: Ø 45mm

Finishing	Art. No.
SS matt	AFS-01 US32D
Polish Brass	AFS-01 US3
Black Matt	AFS-01 US19

Elite Floor Door Stops

AFS-02

Model No.: **AFS-02**

Description: Door Stop SSS

Dimensions: Ø 45mm

Finishing	Art. No.
SS matt	AFS-02 US32D
Polish Brass	AFS-02 US3
Black Matt	AFS-02 US19

Conical Floor Door Stops

AFS-03

Art. No.: **AFS-03 US32D**

Description: AFS-03 ASSA ABLOY Conical Floor Door Stop SC

Finish: Satin Stainless Steel

Tubular Wall Mount Stopper

AWS-01

Model No.: **AWS-01**

Dimensions: Ø 19mm x 63mm (H)

Finishing	Art. No.
SS matt	AWS-01 US32D
Polish Brass	AWS-01 US3
Black Matt	AWS-01 US19

Square Wall Mount Stopper

AWS-02

Art. No.: **AWS-02 US32D**

Dimensions: 16mm x 16mm x 66mm

Finish: Satin Stainless Steel

Double Robe Hook

ARH-01

Art. No.: ***ARH-01 US32D***

Dimensions: Ø 51mm x 50mm (L)

Finish: Satin Stainless Steel

Double Robe Hook

ARH-02

Art. No.: ***ARH-02 US32D***

Dimensions: Ø 51mm x 50mm (L)

Finish: Satin Stainless Steel

Double Robe Hook

ARH-03

Art. No.: ***ARH-03 US32D***

Dimensions: Ø 51mm x 50mm (L)

Finish: Satin Stainless Steel

Coat / Robe Hook

ARH-04

Art. No.: ***ARH-04 US32D***

Dimensions: Ø51mm x 50mm (L)

Finish: Satin Stainless Steel

Coat / Robe Hook

ARH-05

Art. No.: ***ARH-05 US32D***

Dimensions: 20mm x 73mm (L)

Finish: Satin Stainless Steel

Door Security Chain

ADSS-01

Art. No.: ***ADSS-01 US26D***

Dimensions: 25mm x 51mm x 100mm (min)

Finish: Satin Chrome

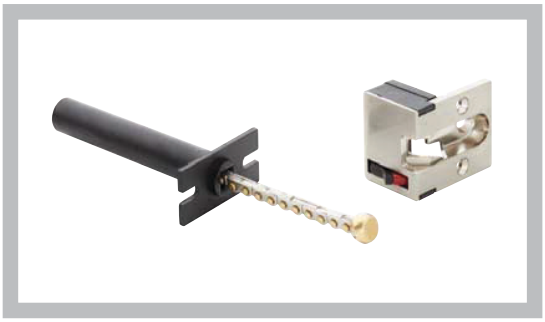

Door Guard

ADSS-02

Model No.: **ADSS-02**

Description: ADSS-02 ASSA ABLOY Security Door Guard SC

Finishing	Art. No.
SS matt	ADSS-02 US32D
Polish Brass	ADSS-02 US3
Black Matt	ADSS-02 US19

Door Viewer

ADSS-05

Model No.: **ADSS-05**

Description: Door viewer 180° with cover
For door thickness 40mm to 75mm

Finishing	Art. No.
SS matt	ADSS-05 US32D
Polish Brass	ADSS-05 US3
Black Matt	ADSS-05 US19

Security Bolt

ADSS-04

Art. No.: **ADSS-04 US32D**

Dimension: 25mm x 51mm

Finish: Satin Stainless Steel

Cylinder Pull

ACP-01

Art. No.: ***ACP-01 US32D***

Description: ACP-01 ASSA ABLOY Euro Cylinder Pull SSS
Dimension: 45mm x 76mm

Finish: Satin Stainless Steel

Barrel Bolts

Art. No.: ***ABB-01 US32D, ABB-02 US32D, ABB-03 US32D***

Dimensions:
ABB-01 - 100mm
ABB-02 - 150mm
ABB-03 - 200mm

Finish: Satin Stainless Steel

Recessed Timber Door Flush Bolts

Model No.: ***ABT-01, ABT-03, ABT-04, ABT-05***

Dimensions: ABT-01 - 200mm
ABT-04 - 300mm
ABT-03 - 450mm
ABT-05 - 600mm

Finishing	*Length 200mm*	*Length 300mm*	*Length 450mm*	*Length 600mm*
SS matt	ABT-01 US32D	ABT-04 US32D	ABT-03 US32D	ABT-05 US32D
Polish Brass	ABT-01 US3	ABT-04 US3	ABT-03 US3	ABT-05 US3
Black Matt	ABT-01 US19	ABT-04 US19	ABT-03 US19	ABT-05 US19

Extension Flush Bolt

ABA-01
ABA-02
ABA-03
ABA-04

Model No.: ***ABA-01, ABA-02, ABA-03, ABA-04***

Dimensions: ABA-01 - 200mm
ABA-04 - 300mm
ABA-02 - 450mm
ABA-03 - 600mm

Finishing	Length 200mm	Length 300mm	Length 450mm	Length 600mm
SS matt	ABA-01 US32D	ABA-04 US32D	ABA-02 US32D	ABA-03 US32D
Polish Brass	ABA-01 US3	ABA-04 US3	ABA-02 US3	ABA-03 US3
Black Matt	ABA-01 US19	ABA-04 US19	ABA-02 US19	ABA-03 US19

Dust Proof Strike

Art. No.: ***AFBA-01 US32D***

Description: AFBA-01 ASSA ABLOY Mortise universal Flush Bolt floor ferrule SC
Dimensions: 39mm(H)

Finish: Satin Stainless Steel

Roller Bolt

Art. No.: ***ABR-01 US32D***

Description: ABR-01 ASSA ABLOY Mortise adjustable Roller Bolt SC
Dimensions: 22mm x 76mm x 45mm

Finish: Satin Stainless Steel

1870 Series
Cylinder Operated Flush Bolt

Designed for greater key control, the 1870 Cylinder Operated Flushbolt prevents accidental locking of the inactive leaf of narrow stile aluminum paired doors. May be installed to lock at threshold or at header.

Function
Designed for use instead of conventional flip-lever operated flushbolts, 1870 Cylinder-Operated Flushbolts give building management key control of the inactive leaf of paired narrow stile aluminum doors. Prevents casual locking of the inactive leaf by unauthorized persons. Uses same basic over-center action mechanism as MS® pivoted bolt deadlocks. Recommended for installation at both top and bottom of inactive door with MS1850S MS Deadlock in active door for greatest security. May be installed to lock at threshold or at header.

Operation
360° turn of key throws or retracts the hex-section bolt. Key can be removed only when bolt is in a positively locked or unlocked position. Lock accepts any standard 1" [25.4 mm] length, 1-5/32" [29.4 mm] diameter mortise cylinder with MS® cam such as the 4036 Mortise Cylinder, or thumbturn such as the 4066 Thumbturn, available separately. Lock accepts cylinder from either or both sides.

All measurements are approximate and are provided for informational purposes only. Refer to the product Installation

Dimension

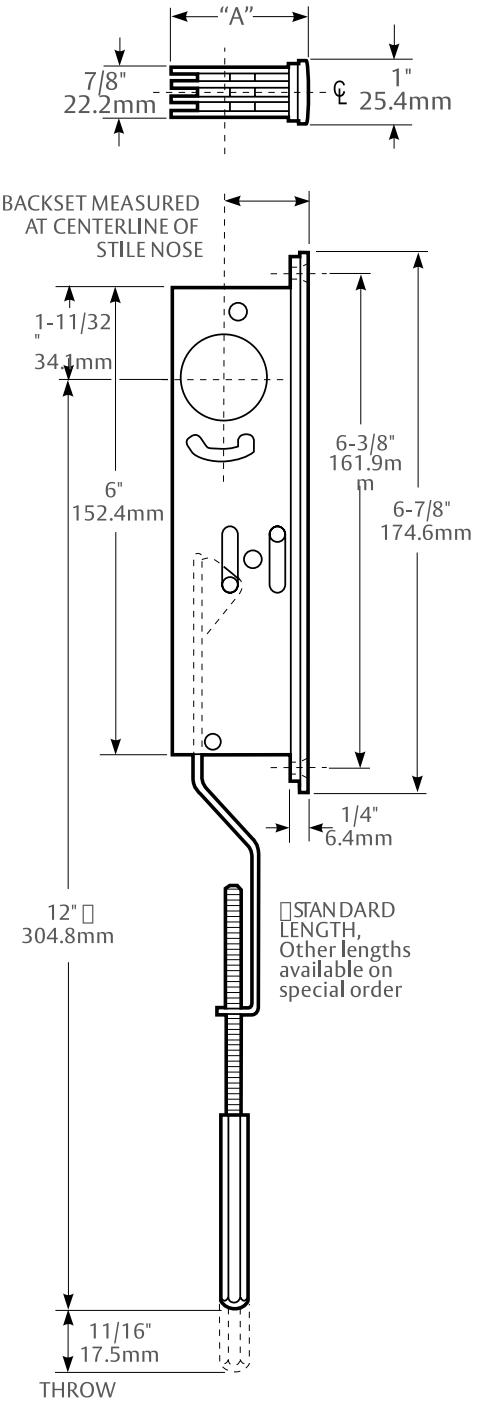

Stile Preparation

For installation locking threshold.
Invert for header locking.

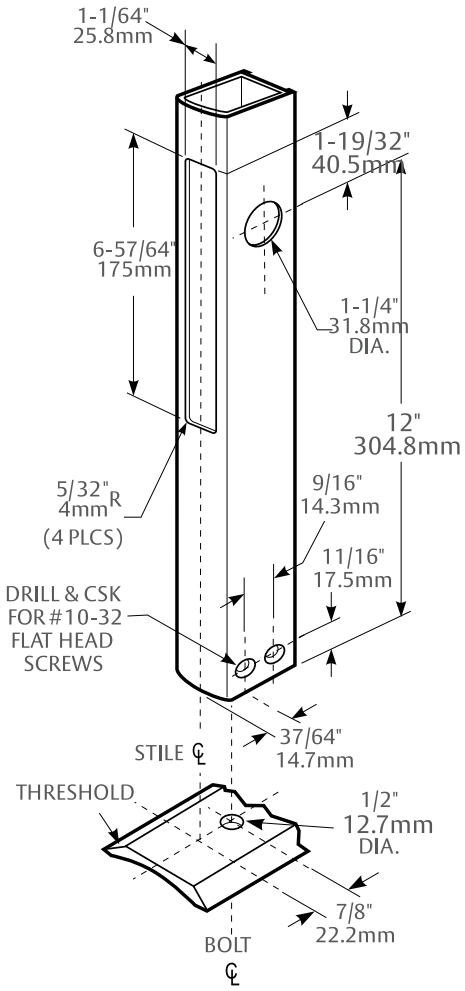

HOW BACKSET IS MEASURED:

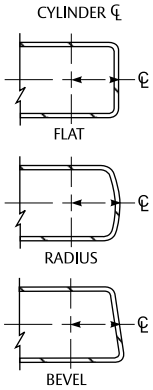

ARMORED FACEPLATE 1" X 6-7/8"
FLAT 1870
RADIUS 1871
RADIUS W/ WEATHERSTRIP 187W
LH BEVEL 1872-X5
RH BEVEL 1872-X6

BACKSET	"A"
31/32" 24.6mm	1-5/8" 41.3mm
1-1/8" 28.6mm	1-25/32" 45.2mm

Toilet Indicator Bolt Set

Art. No.: ***ABTI-01 US32D***

Dimensions: 22mm x 77mm x 80mm

Finish: Satin Stainless Steel

Flush Ringpull

Model No.: ***AFRPL-01***

Dimensions: Ø76mm x 12 turns

Finishing	*Art. No.*
SS matt	AFRPL-01 US32D
Polish Brass	AFRPL-01 US3
Black Matt	AFRPL-01 US19

Sliding Cavity Door Lock Furniture Cylinder escutcheon set

Art. No.: ***ASLF-01 US32D***

Dimensions: Ø51mm

Finish: Satin Stainless Steel

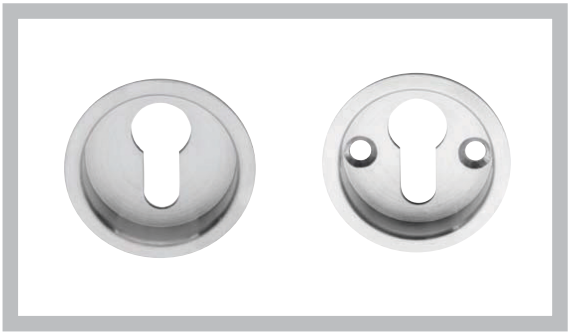

Sliding Cavity Door Lock Furniture Privacy set

Art. No.: ***ASLF-02 US32D***

Dimensions: Ø51mm

Finish: Satin Stainless Steel

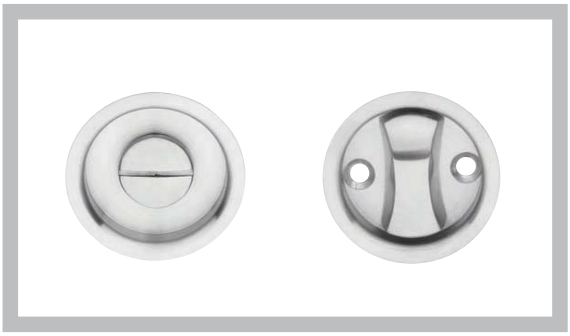

Door Selector

Art.no.: ***AFDS-01 US32D***

Dimensions: 280mm

Finish: Satin Stainless Steel

Gravity Type Door Selector

Art. No.: ***AFDS-02 US32D***

Finish: Satin Stainless Steel

HIP

Linear Type Co-ordinator

Model	Length	Door Width	Finish
AACSM32 US32D	32" 813mm	1200-1500mm	Satin Stainless Steel
AACSM42 US32D	42" (1067mm)	1501-1800mm	Satin Stainless Steel
AACSM52 US32D	52" (1067mm)	1801-2200mm	Satin Stainless Steel
AACSM60 US32D	60" (1524mm)	2201-2600mm	Satin Stainless Steel

Automatic Flush Bolt

Art. No.: ***AFFB-01 US32D***

Dimensions: 31mm x 203mm

Finish: Satin Stainless Steel

Push Plates

Model No.: ***APP-3075, APP-3100***

Dimensions: APP-3075 - 300mm x 75mm
APP-3100 - 300mm x 100mm

Size	*Finishing*	*Art. No.*
300 x 75	Satin SS	APP-3075 US32D
	Black Matt	APP-3075 US19
300 x 100	Satin SS	APP-3100 US32D
	Black Matt	APP-3100 US19

Pull on Plates

Model No.: ***APOP-3075 , APOP-3100***

Description: APOP-3075 ASSA ABLOY 300mm x 75mm Visible Fix Plate with 200mm x 19mm D Pull SSS
APOP-3100 ASSA ABLOY 300mm x 100mm Visible Fix Plate with 200mm x 19mm D Pull SSS

Size	*Finishing*	*Art. No.*
300 x 75	Satin SS	APOP-3075 US32D
	Black Matt	APOP-3075 US19
300 x 100	Satin SS	APOP-3100 US32D
	Black Matt	APOP-3100 US19

Square Rod Type Wall Mount Door Stop

Art. No.: **DSW-005 US32D**

Dimensions: 16mm X 16mm X 66mm

Finish: Satin Stainless Steel

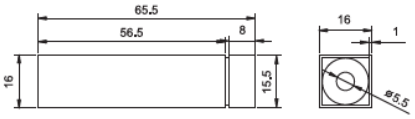

Staple Shape Magnetic Door Holder

Art. No.: **AWS-03 US32D**

Dimensions: 45mmØ X 74mm

Finish: Satin Stainless Steel

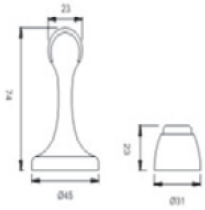

Rod Type Magnetic Door Holder

Art. No.: **DOH002 US32D**

Dimensions: 50mmØ X 74mm

Finish: Satin Stainless Steel

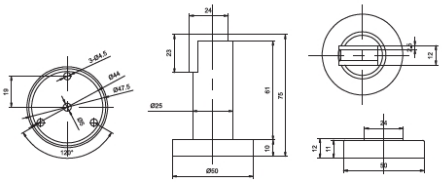

Concealed Magnetic Door Holder

Art. No.: **AFS-04 US32D**

Dimensions: 57mmØ X 48mm

Finish: Satin Stainless Steel

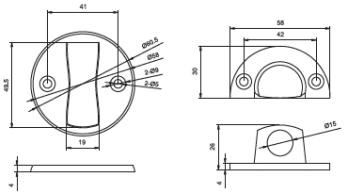

Electric Strike

ASSA ABLOY

Experience a safer
and more open world

AS-130
Standard-type
Electric Strike

General Description

AS-130 electric strike is designed for wooden door, metal door, PVC door and so on. The operating principle of electric strike is that the electric power turns into magnetic force. Electric strike has two working modes: one of the mode is door locked when power off . The another modes is door locked when power on.

Technical Details

Key Features

Size	150L x 40W x 34H (mm)
Voltage	DC12V (Default); DC24V (Order)
Current	12V/240mA; 24V/120mA
Holding force	500kg
Suitable for	Wooden door, Metal door
Finishing	Electroplating
Weight	0.4kg

Fail Safe	AES-130NC
Fail Secure	AES-130NO

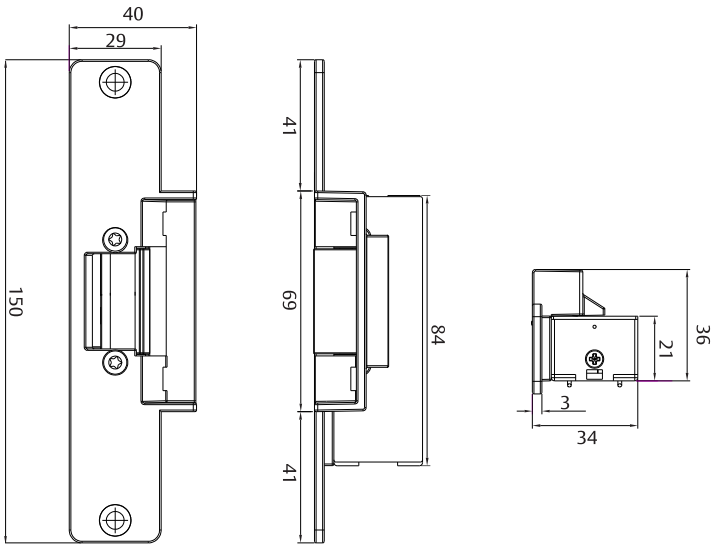

AS-131
Narrow-type
Electric Strike

General Description

AS-131 electric strike is designed for narrow frame door. The operating principle of electric strike is that the electric power turns into magnetic force. Electric strike has two working modes: one of the mode is door locked when power off . The another modes is door locked when power on.

Technical Details

Key Features

Size	160L x 25W x 31H (mm)
Voltage	DC12V (Default); DC24V (Order)
Current	12V/240mA; 24V/120mA
Holding force	500kg
Suitable for	Wooden door, Metal door
Finishing	Electroplating
Weight	0.4kg

Fail Safe	AES-131NC
Fail Secure	AES-131NO

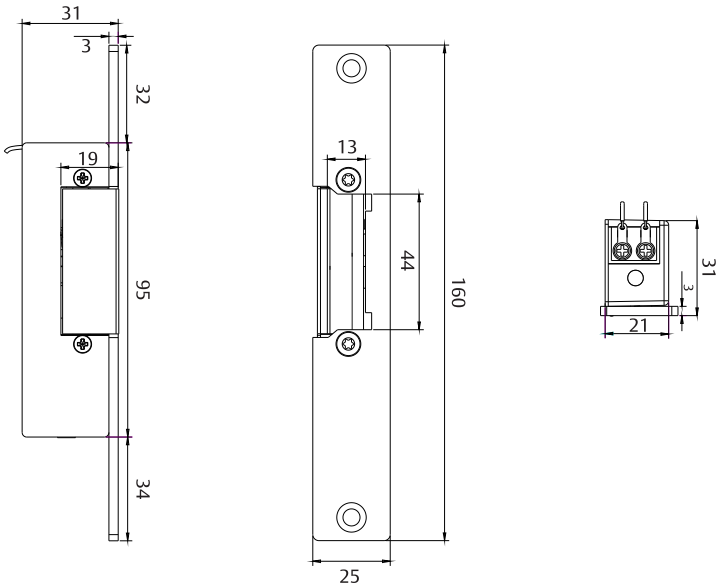

AS-132 Long-type Electric Strike

General Description

AS-132 electric strike is designed with long faceplate. The operating principle of electric strike is that the electric power turns into magnetic force. Electric strike has two working modes: one of the mode is door locked when power off . The another modes is door locked when power on.

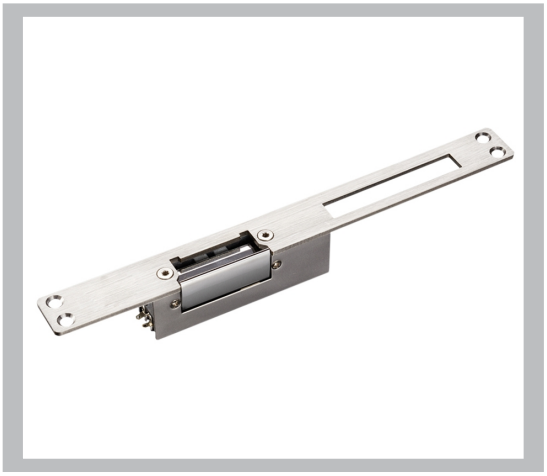

Technical Details

Key Features

Size	250L x 25W x 31H (mm)
Voltage	DC12V (Default); DC24V (Order)
Current	12V/240mA; 24V/120mA
Holding force	500kg
Suitable for	Wooden door, Metal door
Finishing	Electroplating
Weight	0.4kg

Fail Safe	AES-132NC
Fail Secure	AES-132NO

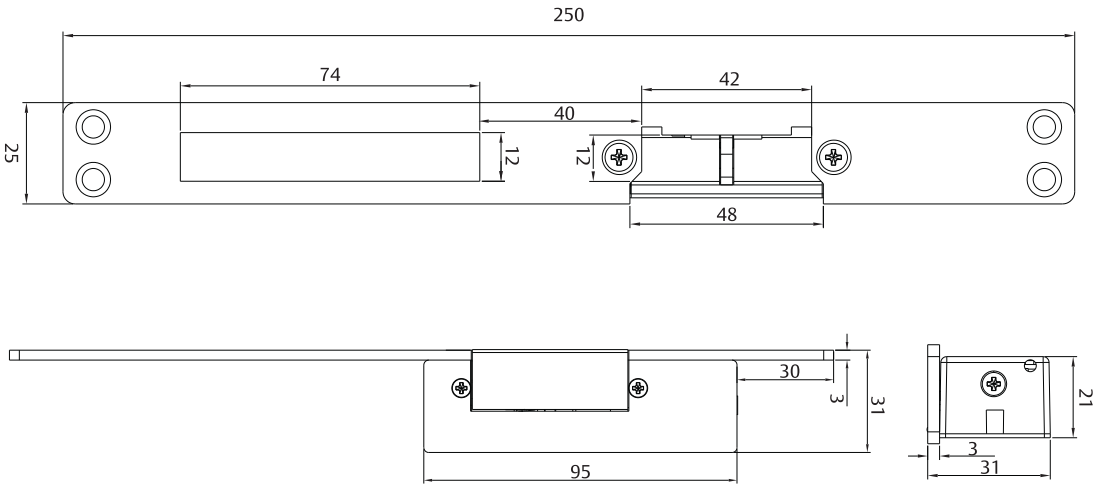

AS-621
Electric Strike
for Push bar

General Description

AS-621 electric strike is suitable for fire exit door with Push-rod lock. Electric strike has two working modes: one of the mode is door locked when power off . The another modes is door locked when power on.

Technical Details

Key Features

Size	230L x 40W x 30H (mm)
Voltage	DC12V or DC24V
Current	12V/320mA; 24V/160mA
Holding force	1000kg
Suitable for	Supporting rod lock fire door
Weight	0.75kg
Lock tongue structure	304 Stainless Steel
Face plate Housing	High temperature paint
Lock tongue	Surface by coating nickel

Fail Safe	AES-621NC
Fail Secure	AES-621NO

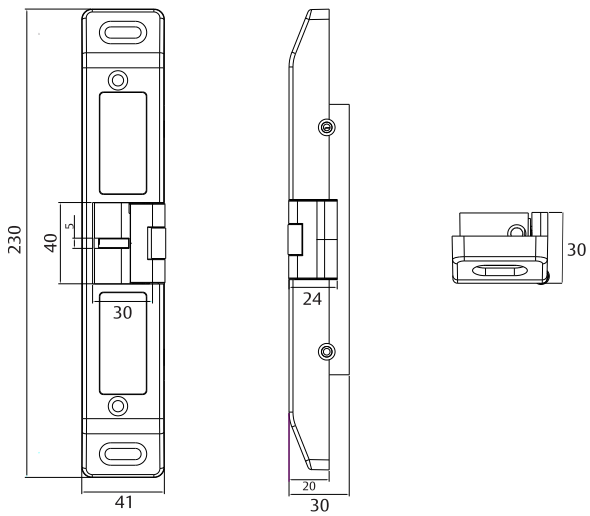

Electric holding magnet

ASSA ABLOY

EFF-EFF
Electric holding magnet in plastic housing

General Description

Holding magnets in plastic housing for surface mounting, with optional interrupter push button

Technical Details

Key Features

Size	99H x 73W x 28D (mm)
Voltage	DC24V
Current	300N / 20mA ; 500N / 25mA ; 800N / 45mA ; 1200N / 105mA
Holding force	300N / 500N / 800N / 1200N
Version	In plastic housing, surface mounting
Protection	Ip40
Operating temp.	0 to +50°

Holding force 300N	8 3 0 - 3 I S - - - - - F 9 0
Holding force 500N	8 3 0 - 5 I S - - - - - F 9 0
Holding force 800N	8 3 0 - 8 I S - - - - - F 9 0
Holding force 1200N	8 3 0 - 12 I S - - - - - F 9 0

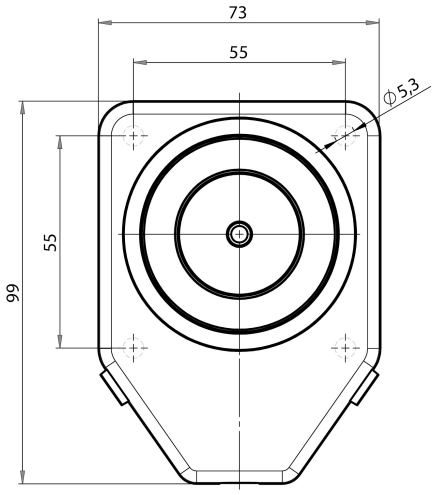

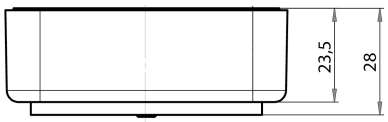

EFF-EFF Counter holding plate

General Description

Counter holding plate, movable.

Technical Details

Key Features

Size	21H (mm)
Diameter	100mm
Type	Movable

Counter holding plate	8 3 0 - - H 1 - - - - - - 0 0

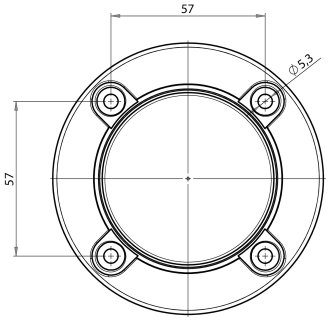

EFF-EFF Counter holding plate

General Description

Counter-holding plate with mounting plate.
Adjustable to extreme angle positions between door and holding magnet.

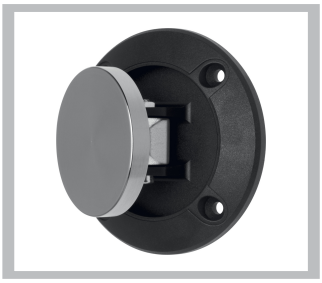

Technical Details

Key Features

Size	46.5H (mm)
Diameter	100mm
Type	Adjustable (extreme angle positions)

Counter holding plate	8 3 0 - - H 2 - - - - - - 0 0

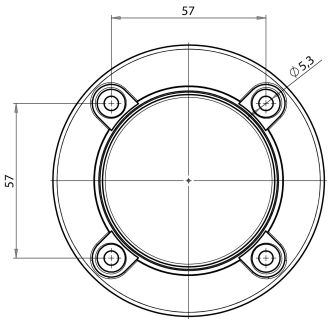

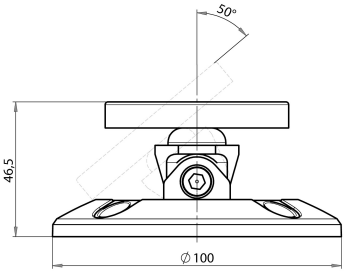

AEM-280
600lbs Magnet
with LED

General Description

AEM-280 magnet offer a great compromise between size and adhesive force and are perfect for small to standard sized doors. Variants are available with an integrated hall-sensor for locked signal, variants for surface and flush mounting, as well as various accessories.

Technical Details

Key Features

Size	250L x 49W x 28H (mm)
Voltage	DC12V (Adjustable DC24V)
Current	12V/500mA (+/- 10%) ; 24V/250mA (+/- 10%)
Holding force	280kg (600lbs)
Suitable for	Wooden / Glass / Metal / Fireproof door
Lock signal	LED (Red - LOCK; Green - UNLOCK)
Operating temp.	-20°C to 55°C (4° to 131°F)

600 lbs Single Leaf Magnet with LED - APS	AEM-280

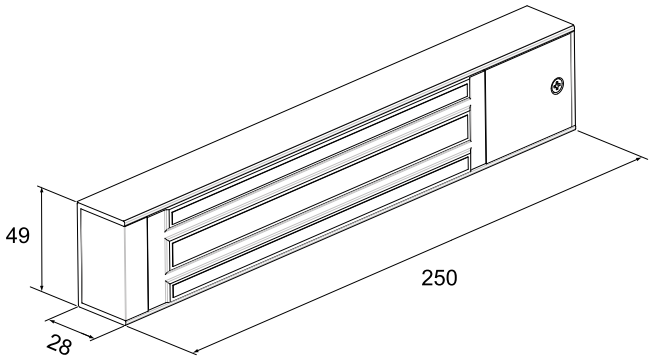

AEM-280D
2 x 600 lbs Magnet with LED

General Description

Double-mini-magnets offers a very good compromise between size and holding force and are ideal for smaller and normal sized standard double leaf doors. Surface mounting. Versions with integrated hall-sensor for locking monitoring are available as well as divers accessories.

Technical Details

Key Features

Size	250L x 49W x 28H (mm)
Voltage	DC12V (Adjustable DC24V)
Current	12V/500mA (+/- 10%) ; 24V/250mA (+/- 10%)
Holding force	280kg (600lbs)
Suitable for	Wooden / Glass / Metal / Fireproof door
Lock signal	LED (Red - LOCK; Green - UNLOCK)
Operating temp.	-20°C to 55°C (4° to 131°F)

600 lbs Single Leaf Magnet with LED - APS	AEM-280D

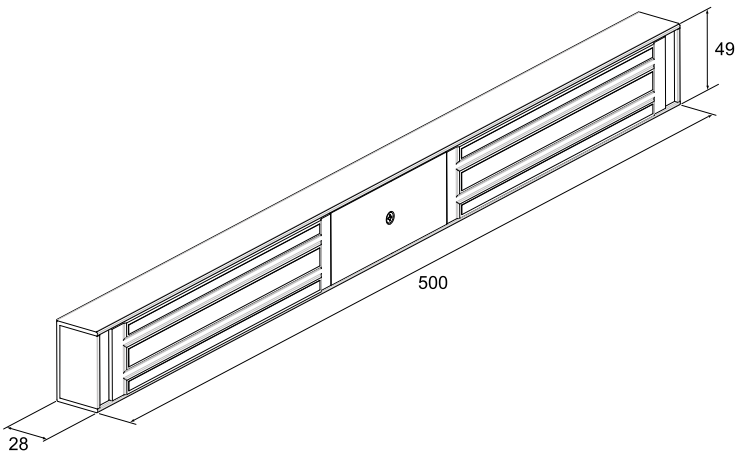

Mounting bracket

L bracket

Z bracket

U bracket

L bracket

General Description

Type	L bracket
Suitable for	Wooden / Metal door - Out swing

For single leaf	AEK-L280
For double leaf	AEK-L280D

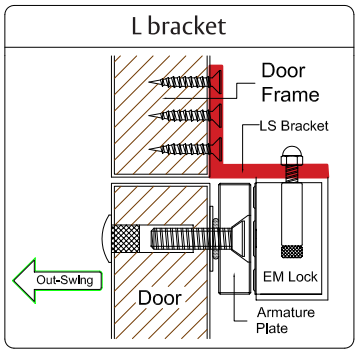

L & Z bracket

General Description

Type	Z bracket
Suitable for	Wooden / Metal door - In swing

For single leaf	AEK-Z280
For double leaf	AEK-Z280D

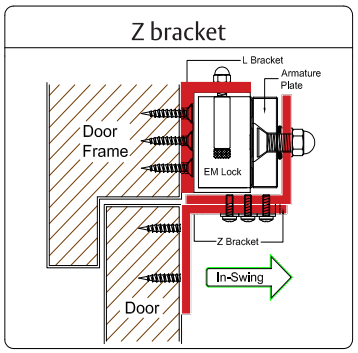

U bracket

General Description

Type	U bracket
Suitable for	Glass door - Out swing

For single leaf	AEK-U280
For double leaf	AEK-U280D

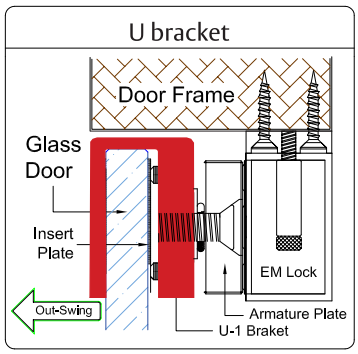

Contactless Release Button

General Description

AIS-841C is an Infrared Sensor Release Button with stainless steel, suitable for all kind of locks.

Type	Contactless Release Button
Size	86L x 86W x 26H (mm)
Induction distance	4 to 12cm
Time delay	1 to 25s
LED indicator	Red - ON (standby) / Green - ON (sensation)

Contactless Exit Button	AIS-841C

Release Button

General Description

ARB-810C is a Stainless steel release button which the most common and the most frequently match used with electric lock.

Type	Contactless Exit Button
Size	86L x 86W x 29H (mm)

Release Button	AIS-810C

Door Release Box

General Description

Mini zinc alloy back box.

Type	Door Release Box
Size	86L x 86W x 25H (mm)

Contactless Exit Button	ABB-811C

Magnetic lock

ASSA ABLOY

PowerSupply

The power supply is automatic, intelligent and uninterrupted, which is elaborately made by applying international advanced technological process, strong current, constant voltage and working temperature. The battery can be fully charged with no more and no less battery level. When discharging, the power will be cut of when the voltage becomes too low to effectively protect the battery and prevent deadlock.

Specification

- Dimension:226Lx226Wx82H(mm)
- Environmental humidity:<95%
- Output Voltage:DC12V
- Output power:30W
- Weight: 3.2kg
- Input Voltage:220VAC+10%,50/60Hz
- Environmental temperature:-20
- Working time for NC lock:30-50 hours
- Working time for NO lock:5-10 hours
- Battery type: Lead-acid battery salt

Primary Functions

1. It can reduce the load of Access Controller and the hidden trouble of malfunction.
2. Green light is the battery indicator. Its goes out when the battery is being charged or dead, and lights up when the battery is fully charged or being used
3. The application of delay control circuit can ensure that unlocking time is between 1-15 seconds.
4. UPS power is provided to automatically providing power in case of power failure. Power will be automatically

Indicators

1. Red light is the power indicator, which lights up when inputting 220V
2. Green light is the battery indicator. Its goes out when the battery is being charged or dead, and lights up when the battery is fully charged or being used.

Instruction diagram

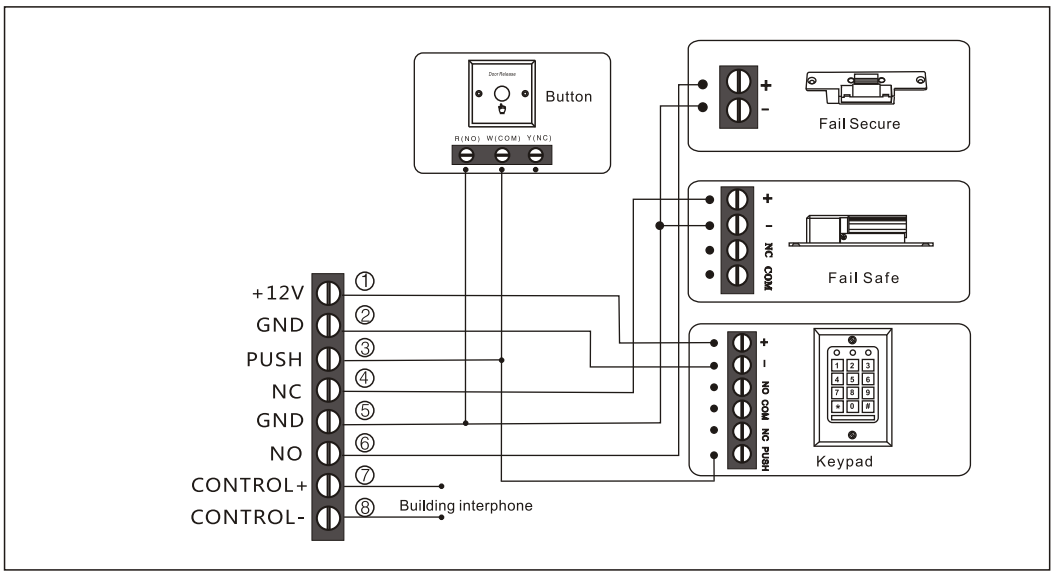

Intergal Wireless Access Control

ASSA ABLOY

Experience a safer
and more open world

Integral Wireless Access Control

ASSA ABLOY

ASSA ABLOY's Integral Wireless Access Control locking solution provides you with all the features you will need to manage your security requirements and provide peace of mind to all users.
Our locking solutions offer total flexibility, adapting our solutions to your specific needs.

ASSA ABLOY's Integral Wireless Access Control locking solution provides you with all the features you will need to manage your security requirements and provide peace of mind to all users.
Our locking solutions offer total flexibility, adapting our solutions to your specific needs.

Escutcheon

Energy Saver Device

Wall Reader

RFID Card

Encoder

Integral
RFID Proximity Identification Technology

Product Features

- Stand-alone Electronic Wireless Access Control lockset with RFID Proximity reader
- Powered by 4xAA batteries that provide up to 12 months normal usage
- 1000 event audit trail
- Stainless Steel Escutcheon
- High security European mortise lockcase
- Panic release function – the deadbolt and latch are automatically retracted by inside handle for easy exit in emergency situations
- 3 point steel latch construction with anti-friction technology
- High quality card reader that reads with optimal accuracy
- Internal Thumb Turn Knob to ensure privacy and increased security

Door Opening Time

Open the door after pressing the handle, automatically locks within 5 seconds.

Under Voltage Indication

Early warning given for low batteries - units will continue to operate for approximately 50 times until the batteries are changed.

Working Conditions

- Anti-Static Interference : >15000V
- Working Humidity : 20%-98%
- Working Temperature : -20˚C - +70˚

RFID Card

- RFID Card Type : Mifare S70
- Frequency : 13.56MHz
- Induction Distance : Approx. 30mm

Energy Saving Device

- The intelligent energy saver controls and manages the electrical installation of the room. It allows the electricity in the room to be switched on after inserting a valid card and during the time that the card is in the energy saver.
- It only works with hotel cards and it incorporates RFID proximity ISO 14443A MIFARE® technology.

Integral
Access Management Components

Access Cards

User Cards:

Open Locks (with applicable access permissions assigned). Access rights assigned through the Integral software for individual doors during specific time periods. User Cards will not unlock doors where the internal thumb turn has been physically enabled.

Access Management Setting Cards

Setting Card : Set the Address ID of door lock

Time Card : Set the door lock "real time"

Recorder Card : Reads the Audit Trail Information from the locking devices

Software Management Cards

Special IC Card: Activates the card issuing system. (Management Software)

Reset Card : Set the door lock to factory setting

Encoder

- Plug-in-and-Play USB Card Encoder
- Easy to learn and use: it easily assigns new users and cards, it modifies them or invalidates lost or stolen cards
- Programs all Cards Types except for the Special IC card, which is used to activate the software management system
- Reads the audit trail of locks and cards
- Windows® based

Door Access Controller Wall Reader

- RFID Door Access Controller Wall Reader can be used on an entry door as part of the complete wireless access control system. It can also be used on any other common area doors in the building
- The RFID Door Access Controller Wall Reader can be used with a number of different electronic lock types. Compatible with electronic magnets, drop bolts, motorised locks and electric strikes
- Includes the correct power supply and request to exit button (REX) on the inside of the door to allow convenient free egress for all users

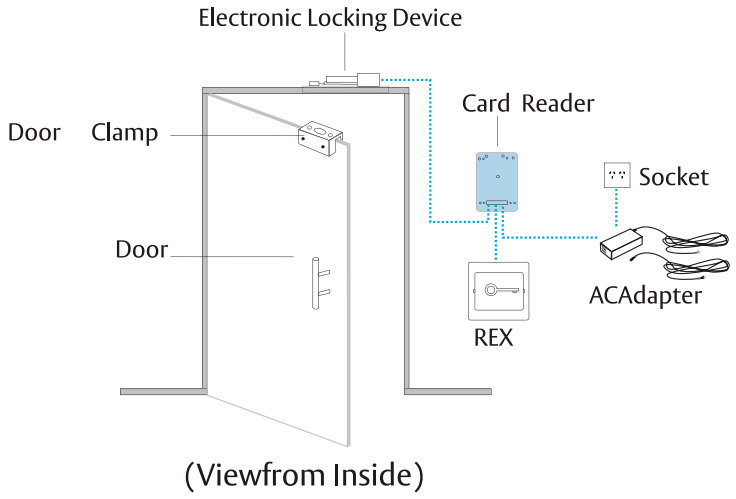

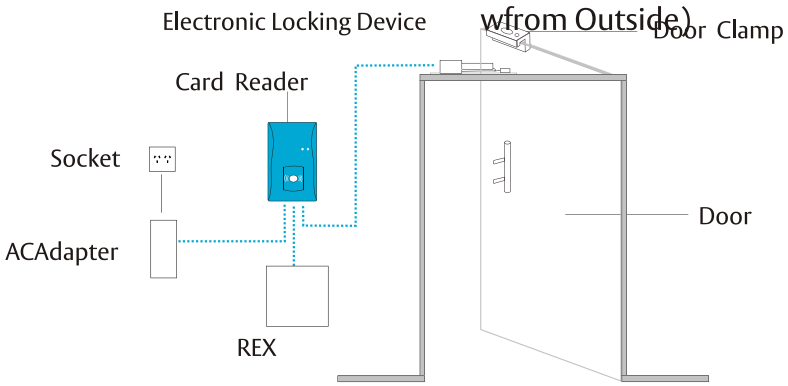

Integral
Product Reference Codes Functions

ASSA ABLOY's Integral Wireless Access Control Solution Product

Encoder	**ITGL910-ENCODER**	Card encoder
Locksets/Escutcheon	**ITGL900-EUT1I1SS**	ASSA ABLOY Integral Escutcheon - EU Version (35mm - 55mm Door)
	ITGL-EUT1I1KOSS	ASSA ABLOY Integral Escutcheon with Key Override (35mm - 55mm Door)
Cards	**ITGL920-ICCard**	Special IC card: Activates the card issuing system
	ITGL920-RECORD	Record card: Reads the audit trail information from the locking devices
	ITGL920-USERCARD	User Cards: Writable cards All writable cards can program the following cards - Setting card - GM card -Limit card - Guard card - Limit all card - User card - Single card - Time card - Floor card - Reset card - Zone card -Stop card
Product Accessories	**ITGL930-ENERGY**	Intelligent energy saving device
	ITGL930-WALL	Wall mounted RFID door access controller (Includes) - Reader & Power supply & REX (Request to exit button)
	ITGL930-LIFT	Lift controller 2 - 27 floors (Includes) - Power supply & lift card reader
	ITGL930-UPD	Wall RFID Door Access Updater
	ITGL900-HHD	Hand Held NFC Programming Device

Integral
Access Control Management System

Software

A simple to use software system that makes it easy to manage and maintain your access control

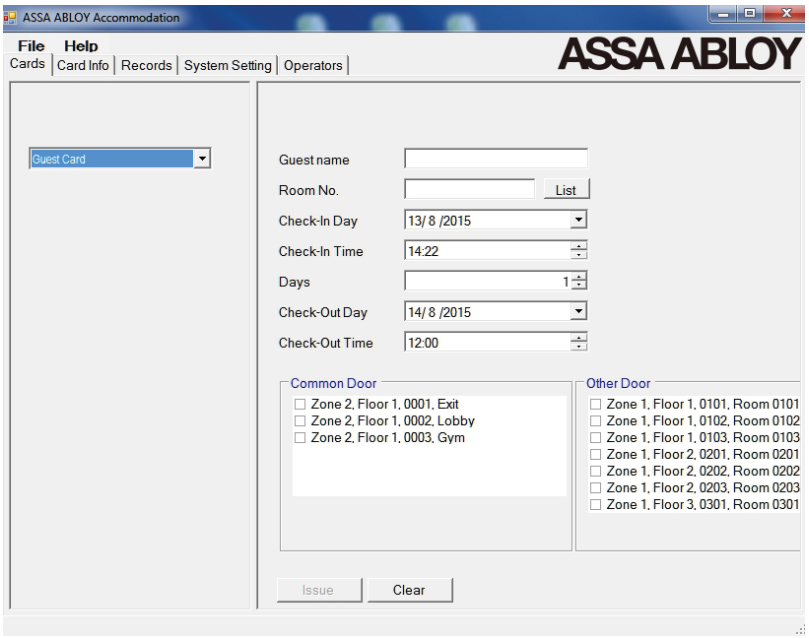

- Software available in commercial or accommodation versions
- Basic door management software system that is simple to add and delete doors/users as necessary
- Flexible user access rights
- Software Management Cards for activating card issuing system and initializing the door locks
- Access Management Setting Cards for setting the Wireless Access Control Lock ID and "real time" clock.
- Audits: Show and report on;
  - Lists of individual doors
  - Identification of users
  - Doors by floor, building, block, zone etc.
  - A report of every opening/closing registered by all locks/readers
  - All events relating to the operation of the software (Logins etc.)
- Different levels for operators (Administrators)
- Intuitive Windows® based software connected to a USB card encoder to program/issue cards

Computer Requirements

	ASSA ABLOY Desktop Client	ASSA ABLOY Server / Client
Supported Operatin Systems	Windows 7, Windows Server 2003, Windows Server 2008, Windows Server 2008 R2, Windows Vista, Windows XP	Windows 7, Windows Server 2003, Windows Server 2008, Windows Server 2008 R2
System Memory	Minimum 2 GB	Minimum 4 GB
Hard Disk	1 GB of Disk Space	4 GB of Disk Space

g

Processors:

ASSA ABLOY Desktop Client & ASSA ABLOY Server / Client:

X86 : Pentium III-compatible processor or faster (Processor Speed - 1.0 GHz or faster

X64 : Minimum: AMD Opteron, AMD Athlon 64, Intel Xeon with Intel EM64T support, Intel Pentium IV with EM64T support (Processor Speed - 1.0 GHz or faster)

Sliding Door Fitting

ASSA ABLOY

Experience a safer
and more open world

Sliding door fitting

ASSA ABLOY

ASSA ABLOY
Sliding door fitting

General Description:

Series AST0113 is a robust smooth running straight sliding door hardware system ideal for creating room dividers. Suitable for both wooden and metal doors up to 100kg the system has low initial friction and is easy to install. There is a range of products including fittings kits and soft close to complete your sliding door system.

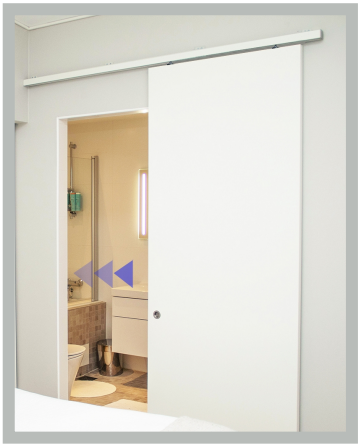

Type of sliding

Standard sliding		
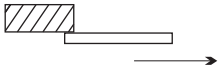	Standard sliding	AST0113 x 1 set
	Soft closing - 1 side	AST0215 x 1 set
	Soft closing - 2 sides	AST0305 x 1 set
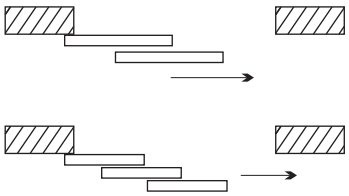	Telescopic 2 door	ASC0002
	Telescopic 2 door	ATE0103
	Simultaneous - 1 side	ASC0002

Running track

Features:

- Size 38 x 34mm
- Material: Aluminium.
- Available length: 2000 / 3000 / 4000 / 6000mm.
- Finish: Silver colour anodize.
- 2 type of installation: top hanging
  side hanging with wall mounting bracket

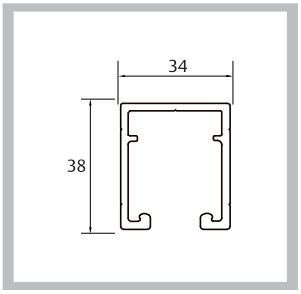

Running track, 2000mm	A100/2
Running track, 3000mm	A100/3
Running track, 4000mm	A100/4
Running track, 6000mm	A100/6

Sliding door fitting

ASSA ABLOY

AST0113
Sliding door fitting, max loading 100kg, non soft-close

Features:

- Straight sliding, without soft closing mechanism.
- For 1 leaf.
- Min. door thick: 33mm.
- Max. loading: 100kg / leaf.
- Celling instalation (default) and wall installation (option).
- Complete set: 2 running gear
  1 floor guide
  2 track buffer

- Please order running track / guide channel (separately)
- Recommend : Door height not over door width x 3 (H < 3* W)

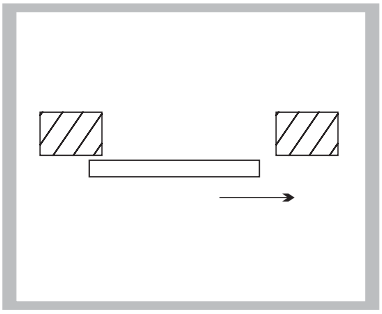

Art. No.	AST0113

Complete set included:		
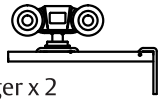 Hanger x 2	Floor guide x 1	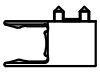 Stopper x 2

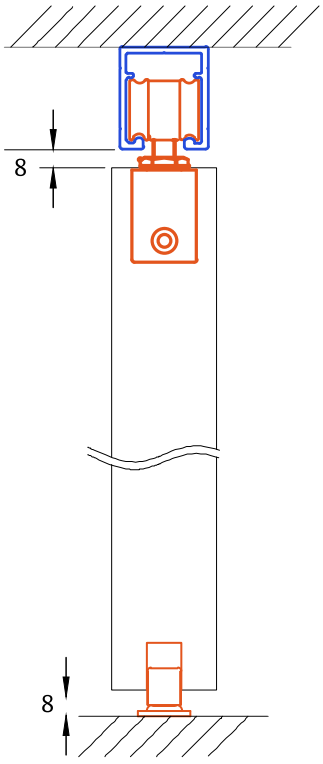

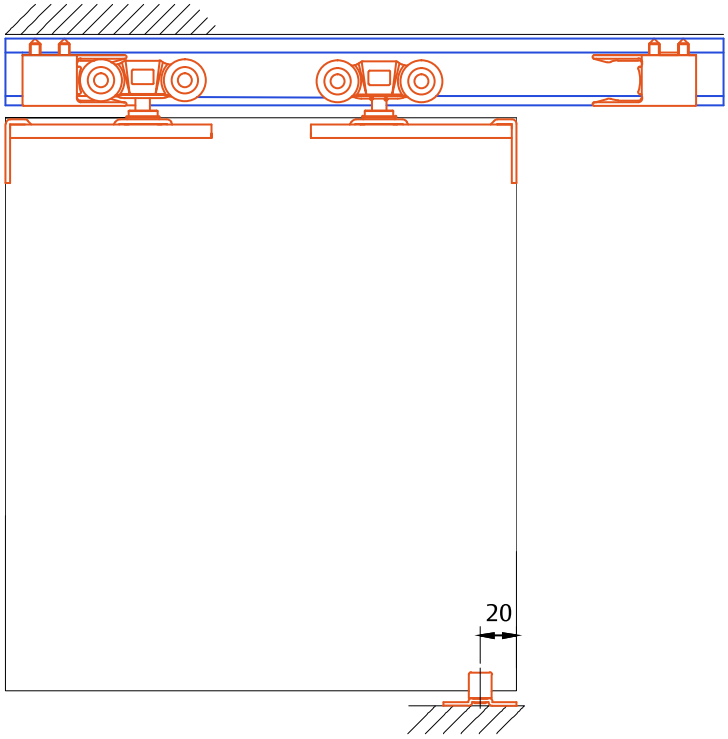

Sliding door fitting

AST0215
Sliding door fitting, 100kg, soft-close 1 side

Features:

- Caters for metal or wood doors weighing up to 100kg.
- Gently decelerates the door into its final position - preventing slamming.
- Discreet design - soft close mechanism is concealed within the track.
- Easy to install.
- Track, guide, channel and brackets must be purchased in addition to this kit.
- Gently decelerates the door into its final open or closed position - preventing slamming and increasing product longevity
-

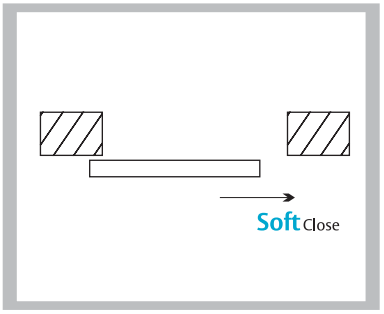

- Please order running track (separately)
- Recommend : Door height not over door width x 3 (H < 3 * W)

Art. No.	AST0215

Complete set included:			
Hanger + activator x 1	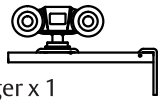 Hanger x 1	Floor guide x 1	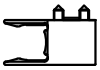 Stopper x 1

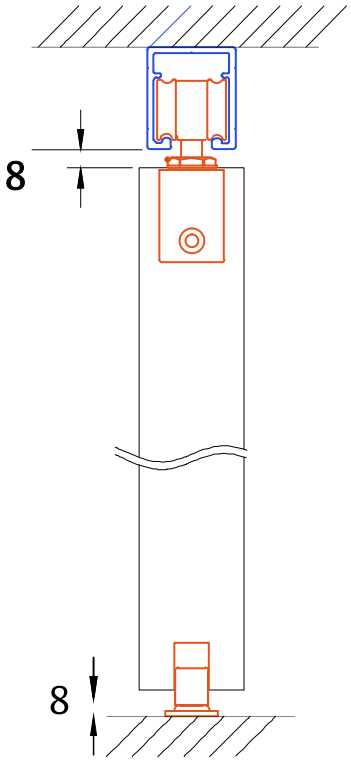

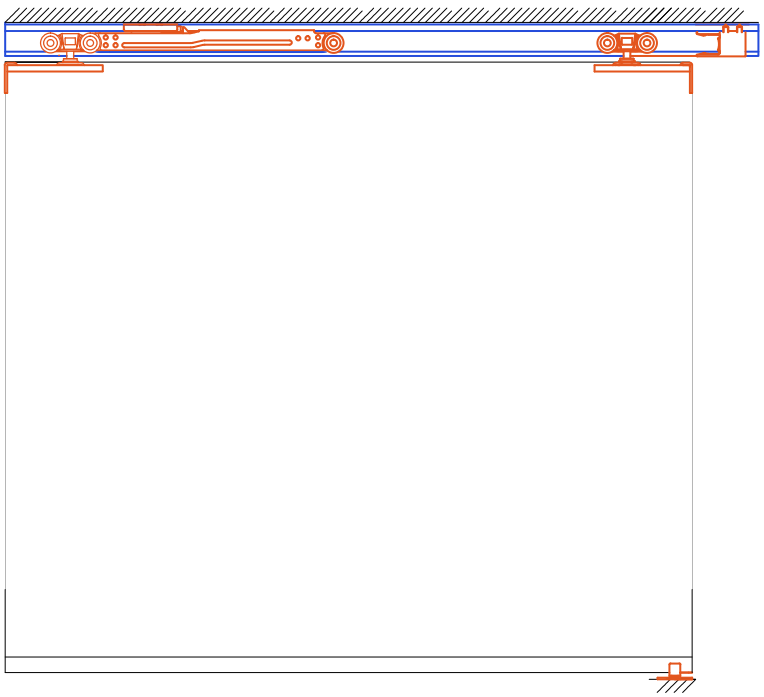

Sliding door fitting

ASSA ABLOY

AST0305
Simultaneously sliding, 2 side

Features:

- Caters for metal or wood doors weighing up to 100kg.
- Gently decelerates the door into its final position - preventing slamming.
- Discreet design - soft close mechanism is concealed within the track.
- Easy to install.
- Track, guide, channel and brackets must be purchased in addition to this kit.
- Gently decelerates the door into its final open or closed position - preventing slamming and increasing product longevity

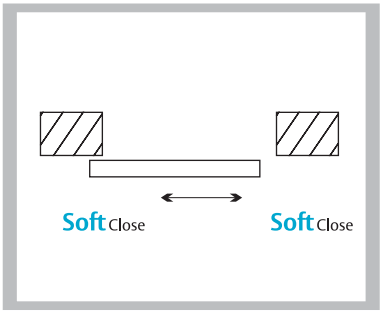

- Please order running track (separately)
- Recommend : Door height not over door width x 3 (H < 3 * W)

Art. No.	AST0305

Complete set included:	
Hanger + activator x 2	Floor guide x 1

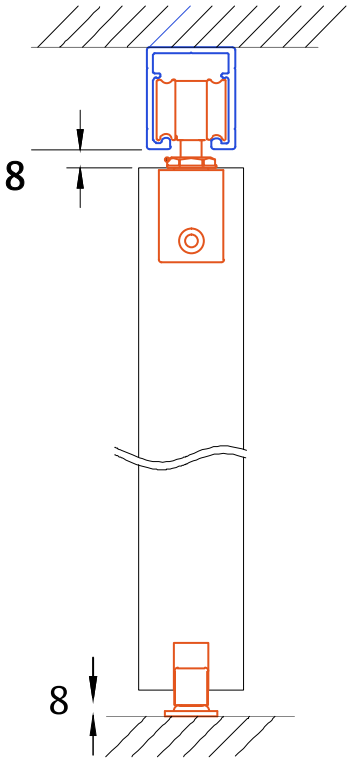

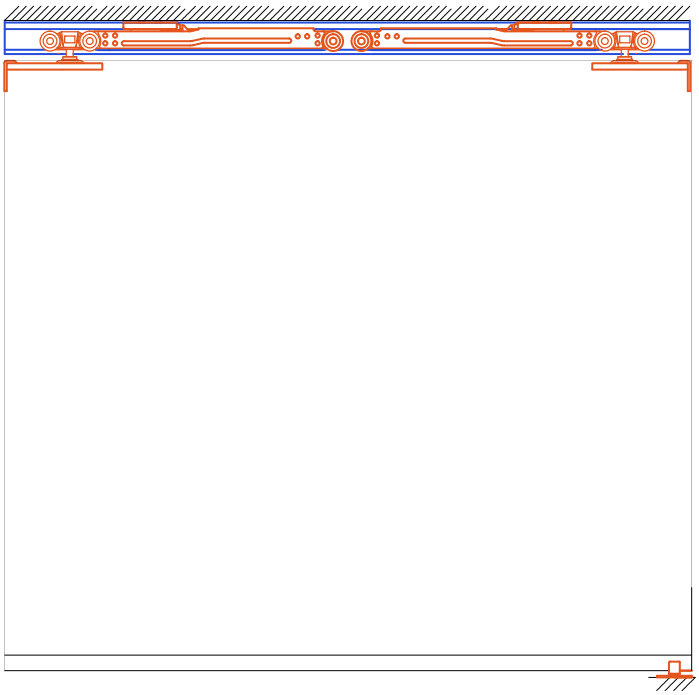

Sliding door fitting

ASSA ABLOY

ATE0103
Telescopic 2 doors

Features:

- Ideal for sliding room dividers to create flexible living spaces.
- Designed without the need for a guide channel to allow a minimalistic finish.
- Doors are linked together via a toothed belt and pulley, allowing them to travel simultaneously.
- Doors can slide to one or both sides of the opening.
- Available in three different kit variants to cater for multiple door configurations.
- Track must be purchased in addition to kitdoor configurations.
- Track must be purchased in addition to kit.

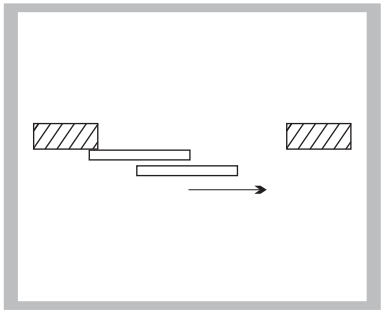

Note: This set not included sliding door fitting and running track.
Please order sliding door fitting and running track seperately.

Art. No.	ATE0103

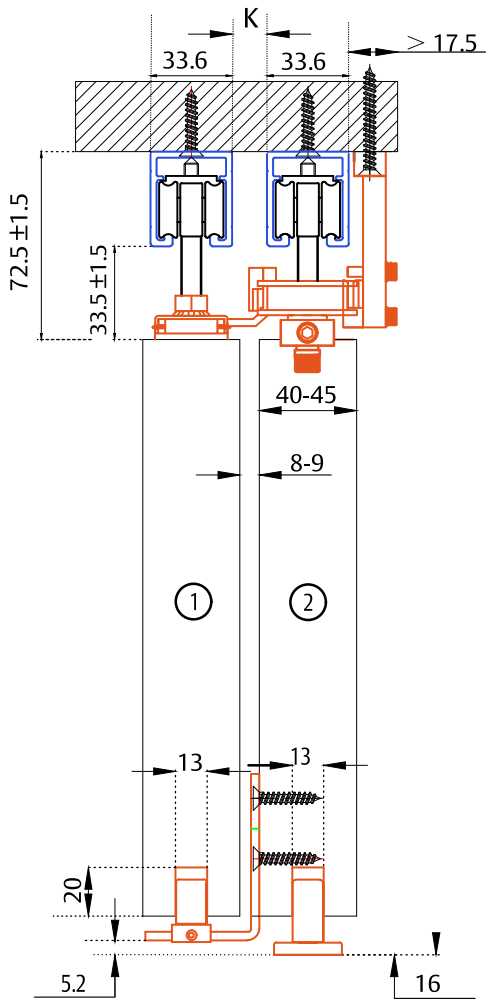

Complete set included:	
Short arm x 1 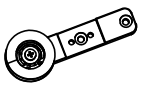	Long arm x 1 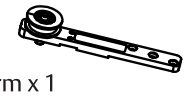
Fixed floor guide x 1 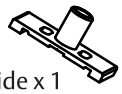	Belt retain block x 1
Bell joint bracket x 1	Datum block x 1
Toothed belt x 1 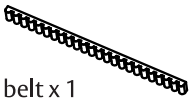	Second door bracket x 1

Sliding door fitting

ASSA ABLOY

ATE0103-T
Telescopic 3 doors

Features:

- Ideal for sliding room dividers to create flexible living spaces.
- Designed without the need for a guide channel to allow a minimalistic finish.
- Doors are linked together via a toothed belt and pulley, allowing them to travel simultaneously.
- Doors can slide to one or both sides of the opening.
- Available in three different kit variants to cater for multiple door configurations.
- Track must be purchased in addition to kitdoor configurations.
- Track must be purchased in addition to kit.

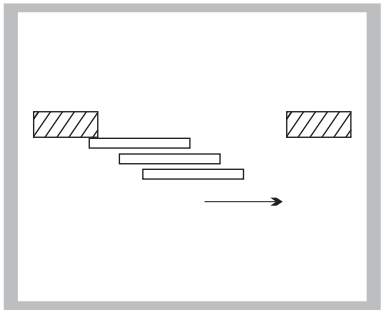

Note: This set not included sliding door fitting and running track.
Please order sliding door fitting and running track seperately.

Art. No.	ATE0103-T

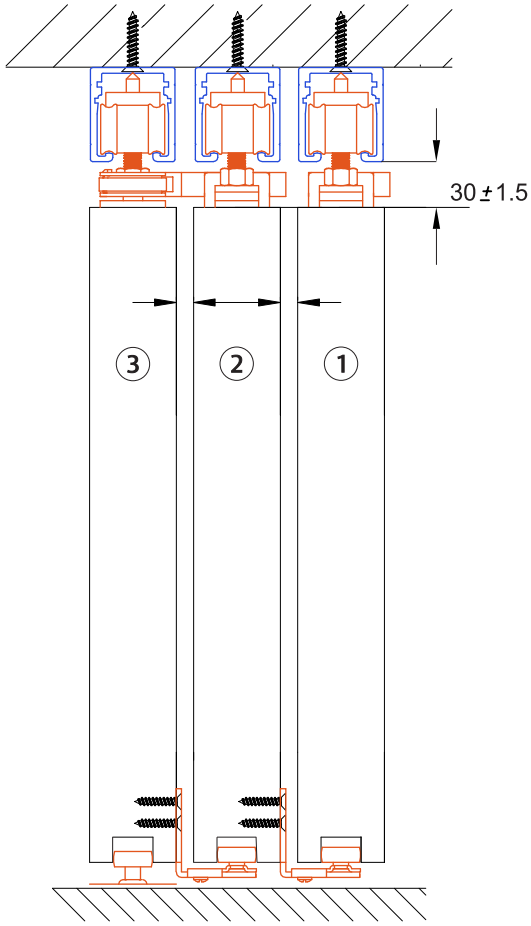

Complete set included:	
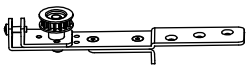 Short arm x 1	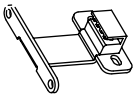 Long arm x 1
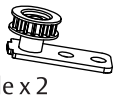 Fixed floor guide x 2	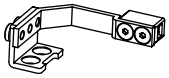 Belt retain block x 2
Bell joint bracket x 1	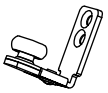 Datum block x 2
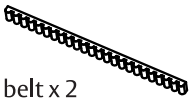 Toothed belt x 2	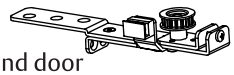 Second door bracket x 1

Sliding door fitting

ASSA ABLOY

ASC0002
Simultaneously
2 doors

Features:

- For wooden or metal doors weighing up to 100kg.
- Other components available to purchase including tracks, brackets and nylon guide.
- To be used with the A100 anodised alumunium running track.
- Quiet and smooth operation.
- Easy to install.

Note: This set not included sliding door fitting and running track.
Please order sliding door fitting and running track seperately.

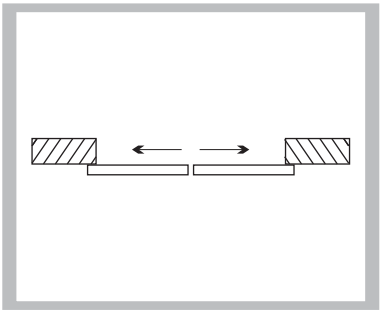

Art. No.	ASC0002

Complete set included:		
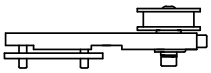 Pulley wheel x 2	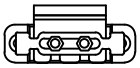 Belt securing bracket x 2	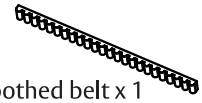 Toothed belt x 1

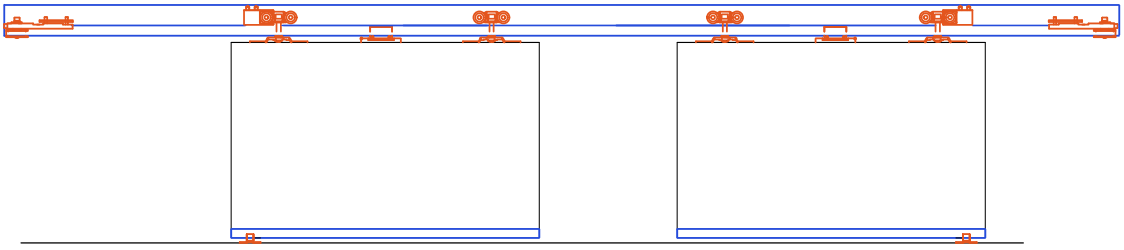

Sliding door fitting

ASSA ABLOY

Shower glass sliding door

Features:

- Sliding door system for frameless glass showers in SS304 stainless steel material, satin finish.
- Max. door weight is 40kg per door.
- Max. door width is 1,000mm and max. door height is 2,000mm.
- Max. enclosure width is 2,000mm.
- Recommended fixed panel width is 1,160mm and max. fixed panel height is 2,010mm.
- Sold as a kit; three finishes available (Chrome Polished, Brushed Nickel, Matte Black). Kit components image displays what is part of the kit and not the finish.
- Glass door diagram with measurements available.
- Suitable for 8-10mm glass. Glass not included.

Note: This set not included running track. Please order running track seperately.

Art. No.	ABS-COM US32

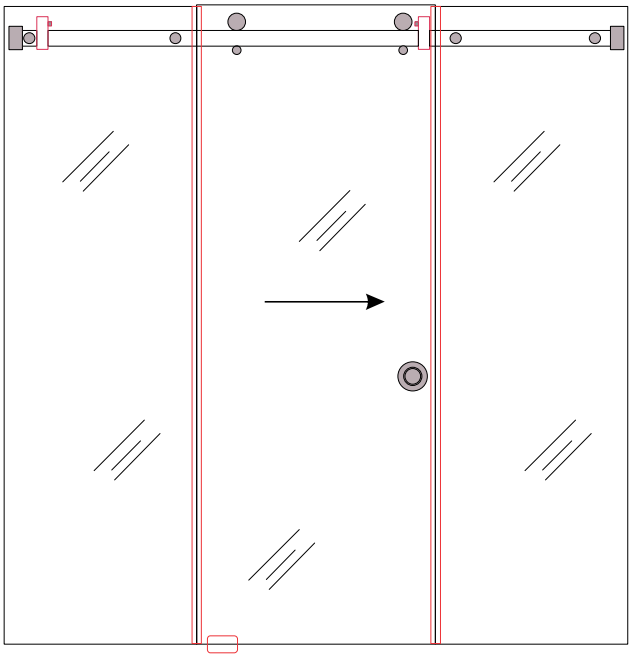

Complete set included:	
Fixing clamp x 2	Roller x 2
Anti flip x 2	Guide x 1
End support x 2	Handle x 1
Stopper x 2	

ABS-07 US32	Sliding track, rectangular shape, 2000mm polished stainless steel

The ASSA ABLOY Group is the global leader in access solutions. Every day, we help billions of people experience a more open world.

ASSA ABLOY Opening Solutions leads the development within door openings and products for access solutions in homes, businesses and institutions. Our offering includes doors, door and window hardware, mechanical and smart locks, access control and service.

ASSA ABLOY
Opening Solutions

ASSA ABLOY Vietnam
20th floor, 2 Bis - 4 - 6, Le Thanh Ton St,
Ben Nghe Ward, Dist 1, Ho Chi Minh City
Tel: +84 28 2249 8833
assaabloyopeningsolutions.com.vn
info.vn@assaabloy.com